2023 Formula Regional Americas Championship Sporting Regulations

V2 | FINAL
FEBRUARY 20, 2023

TABLE OF CONTENTS

FORWARD 3
1. REGULATIONS 3
2. GENERAL UNDERTAKING 3
3. GENERAL CONDITIONS 4
4. LICENSES AND ELIGIBLE DRIVERS 4
5. CHAMPIONSHIP EVENTS 5
6. FR AMERICAS CHAMPIONSHIP 5
7. DEAD HEAT 6
8. PROMOTER 7
9. ORGANIZATION OF EVENTS 7
10. INSURANCE 7
11. OFFICIALS 7
12. COMPETITORS APPLICATIONS 9
13. EVENT PASSES 10
14. INSTRUCTIONS AND COMMUNICATIONS TO COMPETITORS 10
15. INCIDENTS & CODE OF CONDUCT DURING THE EVENT 10
16. PROTESTS AND APPEALS 13
17. SANCTIONS 15
18. CHANGES OF DRIVER 16
19. DRIVING 16
20. LIVERY 17
21. TESTING RESTRICTIONS 18
22. PIT ENTRY, PIT LANE AND PIT EXIT 19
23. REGISTRATION, SCRUTINEERING AND SPORTING CHECKS 21
24. TIRE USAGE DURING THE EVENT 22
25. MINIMUM CAR WEIGHT AND TECHNICAL INSPECTION 23
26. GENERAL CAR REQUIREMENTS 24
27. SPARE CARS 28
28. ENGINE MODIFICATIONS AND USAGE 28
29. FUEL, FUEL SAMPLING AND REFUELING 30
30. GENERAL SAFETY 30
31. PRACTICE AND QUALIFYING SESSIONS 32
32. PRACTICE SESSIONS 33
33. QUALIFYING SESSIONS 33
34. THE GRID 33
35. MEETINGS 34
36. STARTING PROCEDURE 35
37. THE RACES 36
38. SAFETY CAR 36
39. SUSPENDING A RACE OR QUALIFYING SESSION 38
40. RESUMING A RACE 38
41. FINISH 39
42. PARC FERME 40
43. CLASSIFICATION 40
44. PODIUM CEREMONY 40
45. PRESS CONFERENCE AND PROMOTION 40
46. VIDEO PROCEDURE 42
47. APPENDIX 1 – DRIVERS SAFETY KIT 43
48. APPENDIX 2 – CHAMPIONSHIP SERIES FEES 43
49. APPENDIX 3 – CHAMPIONSHIP EVENT PAYOUT 43
50. APPENDIX 4 – LIVERY 44
51. APPENDIX 5 – DRIVER UNIFORMS 45
52. APPENDIX 6 – CREW UNIFORMS 46
53. APPENDIX 7 – TRAILER LIVERY 47
54. APPENDIX 8 – COMMUNICATION FLAGS 48

FORWARD

Parella Motorsports Holdings (PMH) will organize the Formula Regional Americas Championship (the Championship) which comprises two titles of Champion, one for drivers and one for teams. It consists of the FR Americas races which are included in the FR Americas calendar. SCCA Pro Racing will sanction all official races. All the participating parties (organizers, competitors, and circuits) undertake to apply as well as observe the rules governing the Championship.

1. REGULATIONS

1.1 The final text of these FR Americas Championship Sporting Regulations (the "Sporting Regulations") shall be in English, which will be used should any dispute arise as to their interpretation. Headings in this document are for ease of reference only and do not form a part of these Sporting Regulations. Changes to these Sporting Regulations must be made in accordance with Article 18 of the International Sporting Code.

1.2 These Sporting Regulations come into force from the moment of their publication and replace all previous Sporting Regulations. SCCA Pro Racing reserves the right, in its reasonable discretion, to amend, or modify, these Sporting Regulations at any time via Supplemental Regulations, Technical Regulation Bulletins (TRB), Competitor Regulation Bulletins (CRB), Driver and Crew Chief meeting notes, Event mandatory meeting content and other materials as appropriate and designated by SCCA Pro Racing.

2. GENERAL UNDERTAKING

2.1 All drivers, Competitors and officials participating in the FR Americas Championship (the "Championship") undertake, on behalf of themselves, their employees, agents and suppliers, to observe all the provisions as supplemented or amended of the International Sporting Code and its appendices (the Code), the FIA General Prescriptions, the Technical Regulations and these Sporting Regulations, together referred to as the "Regulations".

All drivers, Competitors and anyone participating in the Championship agree that they:

a. Have read and understand the Regulations
b. Agree without reservation to abide by these Regulations
c. Renounce the right to have legal recourse, except with the written consent of SCCA Pro Racing or PMH, to any arbitrator, or tribunal, not provided in these Regulations.

Determinations by Championship officials are non-litigable.

Drivers and Competitors will not initiate or maintain litigation of any kind against PMH, the Sports Car Club of America ("SCCA") or SCCA Pro Racing, or anyone acting on behalf of SCCA, or SCCA Pro Racing, to reverse, or modify, such determinations, or to seek to recover damages, or other relief allegedly incurred, or required, as a result of such determination. If a participant, entrant, Competitor, or official initiates, or maintains, litigation in violation of this provision, that individual or entity agrees to reimburse PMH, SCCA, and/or SCCA Pro Racing, for all costs of such litigation, including travel expenses, and attorneys' fees. Competitors, or officials, involved in such litigation as plaintiffs will have all SCCA Pro Racing privileges suspended until litigation is complete.

2.2 The Championship and each of its Events are governed by SCCA Pro Racing in accordance with these present Regulations. Event means any event counting towards the Championship, commencing at the scheduled time for registration, scrutineering and sporting checks, and including all practice, qualifying and racesessions, and ending at the deadline for the lodging of a protest following the final race session of the Event.

2.3 The Championship shall only be known as and referred to as the SCCA Pro Racing FR Americas Championship Powered by Honda.

3. GENERAL CONDITIONS

3.1 It is the Competitor's obligation to ensure that all persons concerned by his entry observe all the requirements of the Regulations. As used in these Sporting Regulations, the term "Competitor" includes team owners, team principals and team managers. Any references to the masculine gender in these Sporting Regulations shall be deemed to also include the feminine gender.

If a Competitor is unable to be present in person at the Event, he must nominate his representative in writing.

Throughout the entire duration of the Event, a person having charge of an entered car during any part of an Event is responsible jointly and severally with the Competitor for ensuring that the requirements are observed.

3.2 Competitors must ensure that their cars comply with the conditions of eligibility and safety throughout the Event.

3.3 The presentation of a car for scrutineering will be deemed an implicit statement ofconformity.

3.4 All persons concerned in any way with an entered car or present in any other capacity whatsoever in the paddock, pits, pit lane, or track must be an SCCA member in good standing and wear an appropriate pass at all times.

3.5 During any Event, Competitors (and/or anybody associated with the entry of a car), are not permitted to produce or order to produce for publication any moving pictures of competition cars on the track except as provided by the standard in car video system. Any exception to this must be approved in writing by SCCA Pro Racing or PMH. Failure to comply with the above will be reported to the Stewards of the Meeting and may result in a fine or the disqualification of the relevant Competitor from the Event.

3.6 The Competitor and all those affiliated with the team and drivers agree to permit SCCA Pro Racing and PMH and its assigns (including, but not limited to, subsidiaries, series sponsors and promoters/organizers of the Event), free of any charges, duties or fees, to use, license, reproduce, have reproduced, show, have shown, without limitation in space or time, all drawings, soundtracks, photographs, trademarks, films/video pictures concerning Competitors, their drivers, teams or cars involved in the Event(s) on any medium whatsoever for any documents, reports, coverage, broadcast, program, publication, video game or model production, software, etc. whether past, present or future. The Competitor and those affiliated with the team further acknowledge and agree that SCCA Pro Racing and PMH may freely assign or license its rights to a third party.

4. LICENSES AND ELIGIBLE DRIVERS

4.1 All drivers must be at least 16 years old (the date of the birthday being binding) prior to the first day of the Event and hold a SCCA Pro Racing FR Americas license issued by SCCA Pro Racing and/or an appropriate FIA International C License issued by the ASN.

Holders of International Drivers' License Grade A or drivers who have competed in any round of an FIA F2 Championship are not allowed to participate in the Championship.

Drivers with an FIA License from a country other than the United States must have a current authorization to compete from their ASN. This may be in the form of either a letter from the ASN or endorsement on the License of the driver concerned. Drivers are responsible for obtaining the original version of this authorization which must be available for inspection at each Event of the Championship.

A driver must also be in possession of a current medical certificate of aptitude, either included on the competition license or on an attached document.

4.2 No driver may participate in the Championship without successfully completing a training/educational program given by PMH with oversight by SCCA Pro Racing.

4.3 Drivers participating in the Championship must have at least one season of experience in single-seater racing (or any equivalent substantial experience). Any decision as to whether a driver has the necessary experience will be made at the absolute discretion of PMH with oversight by SCCA Pro Racing.

4.4 No Championship winning driver, other than any winner of the best Rookie title, may compete in a further Championship.

4.5 Drivers are permitted to participate in other events sanctioned by PMH or other ACCUS member clubs, subject to the limitations in Article 21. If a driver receives a penalty at one of these events, such penalty can be enforced at a subsequent Event of the Championship at the discretion of the Race Director and/or the Stewards.

4.6 Only drivers over 35 years of age are eligible for the Masters Cup contingency program.

5. CHAMPIONSHIP EVENTS

5.1 Events are reserved for Formula Regional cars as defined in the current Regulations.

5.2 Each Event will have the status of a national competition.

5.3 The Event shall include all practice and qualifying sessions and races.

5.4 There will be two or three races of no more than 35 minutes duration at each Event. The race distance must be specified in the Supplementary Regulations of each Event.

5.5 The maximum number of Events in the Championship is 10 and the minimum is six.

5.6 The minimum number of races in the Championship during a season is 14.

5.7 The final list of Events will be published three months before the start of the season.

5.8 Each Event will be run on circuits holding a valid FIA license grade 3 minimum, as delivered by the FIA.

5.9 At premier Events where the car count is limited, PMH will accept entries weighed on the following criteria:

a. Full-season participation in the Formula Regional Americas Championship, based on number of events completed up to the premier Event in question
b. Participation in another Formula Regional Championship
c. Entry date for premier Event in question

6. FR AMERICAS CHAMPIONSHIP

6.1 The FR Americas Championship driver's title will be awarded to the driver who has scored the highest number of points, taking into consideration all the results obtained during the Events which have taken place. No Championship points or funds will be awarded until all fees and penalties owed to SCCA Pro Racing and PMH are paid in full. Unpaid fees, penalties and any other debts to SCCA Pro Racing and PMH will result in the suspension of competition privileges.

6.2 The FR Americas Championship team title will be awarded to the team which has scored the highest number of points during the season. These points shall be the results from the top two highest placing cars for each team at each round of the Championship or as outlined in Article 6.4.

6.3 Points for both titles will be awarded at each race according to the following scale:

1st	25 points
2nd	18 points
3rd	15 points
4th	12 points
5th	10 points
6th	8 points
7th	6 points
8th	4 points
9th	2 points
10th	1 points

6.4 If a race is suspended under Article 39 (red flag) and cannot be resumed:
a) Half points will be awarded if the leader has completed less than 50% of the original race time.
b) Full points will be awarded if the leader has completed 50% or more of the original race time

6.5 If a race has started, and the Safety Car has been deployed:

a) Half points will be awarded if 50% or more of the race time has been completed under the Safety Car.
b) Full points will be awarded if less than 50% of the race time has been completed under the Safety Car.

If, after the Safety Car has been deployed, the race is suspended under Article 39 (red flag) and cannot be resumed, Article 6.4 will apply.

6.6 Drivers finishing first, second and third in the Championship will be required to be present at the annual banquet unless permission is otherwise granted in writing from SCCA Pro Racing. If required by the FIA to do so, the driver finishing first in the Championship must be present at the annual FIA Prize Giving ceremony.

6.7 Super License points will be awarded based on the current FIA International Sporting Code Appendix L.

6.8 Participation in the Masters Cup program excludes a driver from winning any Championship prize moneys or packages at the annual banquet. A minimum of three drivers participating is required for an event to be eligible for participation credit. The Masters Cup contingency year-end prize is only eligible to the top finishing driver if he has participated in 80% of the Masters Cup rounds. Attendance is required at the annual banquet.

6.9 Rookie of the Year will be determined by the highest finishing Rookie in the Championship point standings. To be eligible for Rookie status, one must participate in three or more events during his first year in the Championship.

7. DEAD HEAT

7.1 Prizes awarded for all the positions of Competitors who tie will be added together and shared equally.

7.2 If two or more drivers or teams finish the season with the same number of points, the higher place in the Championship shall be awarded to:
a. The holder of the greater number of first place finishes.
b. If the number of first place finishes is the same, the holder of the greater number of second place finishes.
c. If the number of first and second place finishes is the same, the holder of the greater number of third place finishes. In the event of a continued tie the process will continue until a winner is determined.
d. If the above described procedure fails to produce a result, SCCA Pro Racing will nominate the winner according to such criteria as it deems fit.

8. PROMOTER

8.1 An application to promote an Event must be made to SCCA Pro Racing. It must be accompanied by written evidence that the promoter has made arrangements to secure the participation of all Competitors.

9. ORGANIZATION OF EVENTS

9.1 The organizer must be a club or body acceptable to SCCA Pro Racing.

9.2 Each organizer shall provide the information set out in the Specific or Supplemental Regulations of the Event.

10. INSURANCE

10.1 The organizer of an Event must ensure that all Competitors, their personnel and drivers are covered by SCCA Pro Racing approved Participant Accident insurance.

10.2 Thirty days before the Event the organizer must send SCCA Pro Racing details of the risks covered by the insurance which must comply with the national laws in force. This insurance certificate, written in English, shall be made available to the Competitors.

10.3 Third party insurance arranged by the organizer shall be in addition and without prejudice to any personal insurance policy held by a Competitor or by any other natural person or legal entity taking part in the Event.

10.4 Drivers taking part in the Event are not third parties with respect to one another.

10.5 Competitor and third-party insurance will be provided by the promoter only during official Championship Events and Championship-approved test days.

11. OFFICIALS

11.1 The following officials must be approved by SCCA Pro Racing:
- a. A permanent Race Director
- b. A permanent Chairman of the Stewards
- c. A permanent Technical Delegate/Chief Scrutineer (the “Technical Delegate”)

11.2 For each Event, the following officials must be approved by SCCA Pro Racing:
- a. Two Stewards of the meeting. The Stewards of the meeting will officiate as a body under the authority of their Chairman.
- b. A Clerk of the Course

11.3 For each Event, PMH may nominate the following with SCCA Pro Racing approval:
- a. A Secretary of the Meeting
- b. A Chief Medical Officer
- c. A Safety Delegate
- d. An ASN Delegate
- e. Media delegate
- f. Scrutineers
- g. Others

11.4 The Clerk of the Course shall work in permanent consultation with the Race Director. The Race Director shall have overriding authority in the following matters and the Clerk of the Course may give orders in respect of them only with his express agreement:
- a. The control of practice and the race, adherence to the timetable and, if he deems it necessary, the formulation of any proposal to the Stewards to modify the timetable in accordance with these Sporting Regulations.

b. The stopping of any car in accordance with these Sporting Regulations.
c. The interruption of practice.
d. The starting procedure.
e. The use of the safety car.
f. The suspending and resuming of the race.

11.5 The Race Director, the Clerk of the Course, the Technical Delegate and the Stewards of the Meeting, or their designated representatives, must be present at the circuit at the start of scrutineering.

11.6 The Race Director must be in permanent radio contact with the Clerk of the Course, the Technical Delegate and the Chairman of the Stewards at all times when cars are permitted to run on the track. Additionally, the Clerk of the Course must be at race control and in radio contact with all the marshals' posts.

11.7 The Stewards shall have supreme authority for the enforcement of the Regulations, the Supplemental Regulations and the timetable within the framework of the Event for which they are appointed, subject to the application of the provisions of Articles 11.8 (r).

a. They may settle any matter which might arise during an Event, subject to the right of appeal provided for in these Sporting Regulations.
b. They may also rule on any alleged breach of the applicable Regulations which occurred outside the framework of any Event, provided that the Event for which they are appointed immediately follows the discovery of this alleged breach.

11.8 Within the framework of their duties, the Stewards notably:

a. shall decide what penalty to enforce in the event of a breach of the Regulations;
b. may amend the Supplemental Regulations;
c. may accept or refuse any correction proposed by a judge of fact, it being understood that the Stewards may overrule judges of fact;
d. may impose penalties or fines;
e. may pronounce disqualifications;
f. may amend the classifications;
g. may prohibit from competing any driver or any car which they consider to be dangerous or which is reported to them by the Clerk of the Course as being dangerous;
h. may apply a penalty to any Competitor or driver whom they consider as, or who is reported to them by the Clerk of the Course or by SCCA Pro Racing or PMH as being ineligible to take part, or whom they consider as being guilty of improper conduct or unfair practice;
i. may order the removal from the Event of any Competitor or driver who refuses to obey the order of a responsible official;
j. may postpone an Event in the event of force majeure or for serious safety reasons;
k. may modify the timetable if requested to do so by the Clerk of the Course or PMH in the interest of safety;
l. may appoint one, or, if necessary, several substitutes in the event of the absence of one or several of the Stewards, especially when the presence of three Stewards is indispensable;
m. may take the decision to stop temporarily or permanently, all or part of an Event;
n. shall declare the classifications and results to be final;
o. may order technical checks to be carried out;
p. may, at the request of SCCA Pro Racing or PMH or on their own initiative, request that alcohol and/or controlled substances testing be carried out, define the number of drivers and/or officials to be tested and select the drivers and/or officials to undergo such alcohol and/or controlled substances testing;
q. may have matters submitted to them by the Race Director so that they may impose the sanctions listed above.
r. In cases where a decision must be taken after an Event, for whatsoever reason, the Stewards may delegate their authority to the subsequent panel of Stewards of one of the subsequent Events or alternatively to a panel of Stewards assembled for this purpose and which shall be selected by PMH with SCCA Pro Racing approval.
s. The Stewards may use any video or electronic systems to assist them in reaching a decision.

11.9 The Clerk of the Course may also be the secretary of the Event and may have various assistants. He is responsible for conducting the Event in accordance with the Regulations. In particular he shall, where appropriate and in conjunction with the Race Director:

a. generally keep order, in conjunction with such military and police authorities as have undertaken to police an Event and who are more immediately responsible for public safety;
b. ensure that all officials are at their posts;
c. ensure that all officials are provided with the necessary information to enable them to carry out their duties;
d. control Competitors and their cars and prevent any disqualified, suspended or excluded Competitor or driver from taking part in an Event for which they are not eligible;
e. ensure that each car, and if necessary, each Competitor, carries the proper identification numbers in accordance with those in the entry list;
f. ensure that each car is driven by the proper driver, marshal the cars in such categories and classes as are required;
g. bring the cars up to the starting line in the right order and, if necessary, give the start;
h. convey to the Stewards any proposal to modify the timetable or regarding the improper conduct of or breach of rule by a Competitor;
i. receive possible protests and transmit them immediately to the Stewards, who shall take the necessary action thereon;
j. collect the reports of the timekeepers, scrutineers, track or road marshals, together with such other official information as may be necessary for the determination of the results;
k. prepare, or ask the secretary of the Event to prepare the data for the Stewards' closing report regarding the Event(s) for which they were responsible.

12. COMPETITORS APPLICATIONS

12.1 Applications to compete in the Championship must be submitted to PMH by using the Entry Form available from PMH and accompanied by the entry fee as specified in Appendix 2. Championship applications must be submitted by the application deadline. Applications at other times will only be considered if a place is available and on payment of a late entry fee as specified in Appendix 2. Acceptance of an Application does not constitute the awarding of an entry.

12.2 Applications shall include:

a. Confirmation that the applicant has read and understood the Regulations and agrees on its own behalf and on behalf of everyone associated with its participation in the Championship, to observe them.
b. The name of the team.
c. The physical address of the Competitor corresponding to this license.
d. Copies of the licenses for both driver and Competitor as well as copies of the related documents according to Article 4.1.
e. The names of the drivers. A driver may be nominated after the applications upon payment of a license fee fixed by SCCA Pro Racing.
f. Confirmation from the applicant that both he and his intended drivers have complied with the requirements of Article 21 of these Sporting Regulations.

12.3 There is no limit to the number of cars a team may enter for the Championship.

12.4 The entry fee per car per Event will be set by PMH as defined in Appendix 2. An Application shall not be considered without the payment of the corresponding fees. The fees paid by unsuccessful applicants will be returned.

12.5 All applications will be reviewed by PMH and accepted or rejected at its absolute discretion. PMH will publish the list of cars and drivers accepted together with their race numbers prior to each Event.

12.6 At its absolute discretion PMH may accept an additional entry from a team for a single Event, under such circumstances the entry fee will be set by PMH.

12.7 PMH may cancel the Championship if less than 12 cars are entered for it by the closing date for entries.

12.8 Any driver entered in the Championship and who is unable to take part in an Event must inform PMH in writing before the end of initial scrutineering of the Event in question.

13. EVENT PASSES

13.1 No pass or credential may be issued or used other than with the agreement of SCCA Pro Racing and PMH. A pass may be used only by the person and for the purpose for which it was issued.

13.2 SCCA Pro Racing and PMH can, at its sole discretion, revoke a pass or credential.

13.3 An official FR Americas Championship annual or event credential is required for pit lane access at all events, unless otherwise stated in the supplemental regulations. All competitors must be prepared to show their credential to any Championship official, PMH official, or track official upon request.

14. INSTRUCTIONS AND COMMUNICATIONS TO COMPETITORS

14.1 The Stewards or Race Director or his approved delegate may give instructions to Competitors by means of special circulars in accordance with the Sporting Regulations. These circulars will be available to all Competitors via print or electronic means.

14.2 All classifications and results of practice and the race, as well as all decisions issued by the officials, will be available via the official mailing list, the official text messaging-based service, or the event's Digital Message Board on the Championship website in the Competitor Portal. A team representative must be monitoring these official channels.

14.3 Any decision or communication concerning a particular Competitor should be posted within 30 minutes of such decision (if practicable).

14.4 Official instructions and communications to Competitors may also be given via a dedicated radio channel, official emailing service, or official text messaging-based service.

15. INCIDENTS & CODE OF CONDUCT DURING THE EVENT

15.1 "Incident" means any occurrence or series of occurrences involving one or more drivers, or any action by any driver, Competitors or team members which can be reported to the Stewards by the Race Director (or directly noted by the Stewards) which:

a. Necessitated the suspension of a practice, qualifying or race session.
b. Constituted a breach of these Sporting Regulations.
c. Caused a false start by one or more cars.
d. Caused a collision.
e. Forced a driver off the track.
f. Illegitimately prevented a legitimate overtaking maneuver by a driver.
g. Illegitimately impeded another driver during overtaking.

Unless it was completely clear that a driver was in breach of any of the above, any incidents involving more than one car may be investigated after the session.

15.2 It shall be at the discretion of the Stewards to decide, upon a report or a request by the Race Director, if a driver or drivers, Competitors or team members involved in an incident shall be penalized.

If an incident is under investigation by the Stewards, a message informing all teams which driver or drivers are involved will, where possible, be displayed on the timing monitors, announced on the dedicated radio channel or via the the Championship text messaging system.

Provided that such a message is displayed or announced within thirty minutes of the end of the session, or a message is delivered to any team concerned within this time, the driver or drivers, Competitors or team members concerned may not leave the circuit without the consent of the Stewards.

15.3 The Stewards may impose any one of the penalties below on any driver, Competitors or team members involved in an incident:

a. A five-second time penalty: five seconds will be added to the elapsed race time of the concerned driver provided he carries out no further pit stop before the end of the race, otherwise, in case of entering the pit lane, the driver must stop in his pit stop position for at least five seconds before re-joining the race.
b. A 10-second time penalty: 10 seconds will be added to the elapsed race time of the concerned driver provided he carries out no further pit stop before the end of the race, otherwise, in case of entering the pit lane, the driver must stop in his pit stop position for at least ten seconds before re-joining the race.

In both of the above cases no work may be carried out on the car during the penalty period of time.

c. A drive-through penalty. The driver must enter the pit lane and re-join the race without stopping.
d. A 10-second stop-and-go time penalty. The driver must enter the pit lane, stop at the designated area at pit out for at least 10 seconds and then re-join the race at the direction of the pit marshal.

If any of the four penalties above are imposed during the last five minutes, or after the end of a race, Article 15.4 (b) below will not apply and five seconds will be added to the elapsed race time of the driver concerned in the case of (a) above, 10 seconds in the case of (b), 30 seconds in the case of (c), and 40 seconds in the case of (d).

e. A time penalty.
f. A reprimand.
g. A drop of any number of grid positions at the driver's next race. If such a penalty is imposed for a race where grid positions were determined following split qualifying sessions, and cars are arranged on each side of the grid accordingly, the number of grid places a driver will drop on his side of the grid will be divided by two (rounded up if necessary).
h. Starting from the pit lane.
i. Deleting one or more lap times during an official session.
j. Apply driver license points (see Article 17.4).
k. A drop of places in the classification of the competition.

If any of the 11 penalties above are imposed they shall not be subject to appeal.

l. Disqualification from the results.
m. Suspension from the driver's next race or Event. However, if the suspension is a result of the accumulation of license points per Article 17.4, the suspension will not be subject to appeal.
n. Monetary fine.

15.4 Should the Stewards decide to impose either of the penalties under Article 15.3 (a), (b), (c) or (d), the following procedure will be followed:

a. The Stewards will give notification of the penalty which has been imposed to the Competitor concerned and, where possible, will ensure that this information is distributed via those outlined in Article 14.4.
b. With the exception of Articles 15.3 (a) and (b) above, from the time the Stewards' decision is announced, the relevant driver may cross the start/finish line (the "Line") on the track no more than twice before entering the pit lane and, in the case of a penalty under Article 15.3 (d), proceeding to the designated area at pit out where he shall remain for the period of the time penalty.

   For the avoidance of doubt, the display or announcement of the Drive Through Penalty "Drive Through" will be repeated a maximum of two times. The Line may be crossed outside of the pit lane on the track a maximum of two times after the penalty is shown for the first time.

However, unless the driver was already in the pit entry for the purpose of serving his penalty, he may not carry out the penalty after the safety car has been deployed. The number of times the driver crosses the Line behind the safety car will be added to the maximum number of times he may cross the Line on the track.

While a car is stationary in the pit lane as a result of incurring a time penalty it may not be worked on during the penalty period of time. However, if the engine stops it may be started by a jump battery after the time penalty period has elapsed.

c. When the time penalty period has elapsed, the driver may re-join the race.
d. Any breach or failure to comply with Articles 15.4 (b) or (c) may result in the car being disqualified.

15.5 Code of Conduct

15.5.1. Any of the following offences, in addition to any offences specifically referred to previously, shall be deemed to be a breach of the Regulations:
   a. An SCCA Member shall not make or cause to be made a public statement and/or communication that criticizes, ridicules, or otherwise disparages another person based upon that person's race, color, creed, national origin, gender, sexual orientation, marital status, religion, age, or handicapping condition.
   b. All bribery or attempt, directly or indirectly, to bribe any person having official duties in relation to an Event or being employed in any manner in connection with an Event and the acceptance of, or offer to accept, any bribe by such an official or employee.
   c. Any action having as its object the entry or participation in an Event of a car known to be ineligible therefore.
   d. Any fraudulent conduct or any act prejudicial to the interests of any Event or to the interests of motor sport generally.
   e. Any pursuit of an objective contrary or opposed to those of SCCA Pro Racing or PMH.
   f. Any refusal or failure to apply decisions of SCCA Pro Racing or PMH.
   g. Any words, deeds or writings that have caused moral injury or loss to the SCCA, SCCA Pro Racing, PMH, its officials, its members or its management.
   h. Any failure to cooperate in an investigation.
   i. Any unsafe act or failure to take reasonable measures, thus resulting in an unsafe situation or are detrimental to auto racing, open-wheel/single-seater racing, SCCA, SCCA Pro Racing, PMH, promoters, sponsors, participants or fans.
   j. Failure to follow the instructions of the relevant officials for the safe and orderly conduct of the Event.
   k. Failure to follow Article 19.

15.5.2. Unless stated otherwise, offences or infringements are punishable, whether they were committed intentionally or through negligence.

15.5.3. Attempts to commit offences or infringements are also punishable.

15.5.4. Any natural or legal person who takes part in an offence or infringement, whether as instigator or as accomplice, is also punishable.

15.5.5. All Competitors are expected to conduct and present themselves in a professional and sportsmanlike manner. Persons and team paddocks whose appearance, associations or affiliations at or away from an Event are deemed inappropriate or who exhibit conduct that is offensive, abrasive, in bad taste, or otherwise inappropriate or who have been convicted of criminal activity may be denied membership or may have their existing membership revoked by SCCA Pro Racing or credential suspended by PMH. Such conduct may also be or be considered a violation of these rules and may result in the imposition of other penalties.

15.5.6. Drivers and Competitors may be required to take part in mandatory meeting/briefings/podium ceremonies and certain fan/media activities as directed by the Championship. Such activities may include but are not limited to driver/Competitor meetings/briefings, podium ceremonies autograph sessions, interviews, fan

forums, tech talks, pit lane or paddock open houses, etc. Failure or refusal to participate as directed, once scheduled and notified either in-person or through the official forms of communication or otherwise, may result in a $250 fine and/or additional penalties. Arriving late, missing the activity or departing early, without permission from the Championship may also result in a $250 fine.

15.5.7. Competitors must ensure that all persons related to their team abide by the SCCA Pro Racing and PMH rules. Throughout the Event, it is the individual and collective responsibility of any team and/or crew to ensure that the rules are respected. Violations are punishable.

15.5.8. Unregistered driver: A driver who has not satisfactorily completed registration and/or sporting checks is prohibited from taking part in any on-track session. Violation of this rule may result in a minimum fine of $5,000.

16. PROTESTS AND APPEALS

16.1 Protests

Protests shall be made in accordance with, and the protest process shall be governed by, these Sporting Regulations and Article 13 of the Code. Protests shall be accompanied by a deposit of $1,000.00 made out to Parella Motorsports Holdings.

16.1.1. Right to Protest

The right to protest lies only with the representative of the competitor. Multiple Competitors cannot lodge a joint protest. A Competitor wishing to protest against more than one fellow Competitor must lodge as many protests as there are Competitors involved in the action concerned.

16.1.2. Subject of a Protest and Protest Time Limit

The following protests must be filed no later than 30 minutes after the publication of the provisional classification, unless such deadline is extended by the Stewards: (a) any alleged error, irregularity or breach of the Regulations occurring during an Event; (b) the alleged non-compliance of cars with the Regulations; or (c) the classification established at the end of the race. Protests against the entry of a Competitor or driver must be filed no later than two hours after the closing time for the official scrutineering of the cars.

16.1.3. Lodging of a Protest, To Whom Delivered and Hearing

a. Any protest shall be in writing and must utilize the Championship Protest Form (available on the Championship website and at the Championship trailer). All relevant sections of such form must be filled in completely for the protest to be admissible.
b. For a protest involving an on-track incident, the file name or reference number from the protestor's on-board video, as well as the running time of the video where the incident is recorded, must be included on the written Protest Form for the protest to be admissible.
c. Where multiple incidents are concerned, whether involving one car or multiple cars, a separate protest must be filed for each incident and for each car concerned.
d. The protest deposit may only be returned if the protest is upheld or withdrawn with the permission of the Chairman of the Stewards.
e. Protests shall be delivered to the Chairman of the Stewards, a Steward of the meeting, the Race Director, the Clerk of the Course or their designated assistant if such exists. Receipt of the protest shall be acknowledged in writing on the Protest Form, with the time of receipt noted.
f. The protestor shall remain present at the track, and available for a hearing, until the hearing is held or until they are released by the Stewards. In the absence of any party concerned or of their witnesses, judgement may be made by default.

16.1.4. Protests Against Automobiles

a. Competitors taking part in a competition may request that an automobile in their class be disassembled, inspected, or any other test be made, provided that they post a cash bond with the Stewards in an amount deemed sufficient in their sole and absolute discretion to be sufficient to cover the total expenses of shipping, travel for officials, disassembly, inspection, and reassembly. Tear downs must be completed as specified unless fully, or partially, withdrawn by the protestor. Protestees may, in some cases, be required to provide a conditional form of payment to third party vendors, shops, or contractors that perform part of the inspection.
b. Bonds required for tear down will be sent to PMH to be held in escrow until the time limit for the appeal has passed, or until an appeal has been granted. If appealed, bond(s) will be held until the national court of appeal declines to accept the appeal, or has its decision published. The same procedure will apply to any recorded evidence in the case (e.g. technical data).
c. The inspection, and/or disassembly shall be conducted under the supervision and control of the Technical Delegate.
d. The decisions of the Championship Technical Delegate are non-protestable and non-appealable.
e. If the automobile shall be found upon inspection to conform to the Regulations, the protestor shall forfeit the bond which shall be used to cover costs incurred. Apportioned bonds that allow for stages of disassembly are permitted and encouraged.
f. If the automobile is found upon inspection to not conform to the Regulations, the protestor's bond shall be returned, and the Competitor, and/or driver, of the protested automobile shall stand all expenses, and shall be subject to disciplinary action as the Stewards shall deem appropriate.
g. Failure of a Competitor, or driver, of a protested automobile to allow inspection under the foregoing terms shall result in immediate penalties deemed appropriate by the Stewards.

16.1.5. Protest Filed in Bad Faith or Without Merit

Any protest filed that, in the sole judgment of the Stewards, is vexatious or malicious, shall subject the protestor and his Competitor to the full range of sanctions and penalties available in these Sporting Regulations and/or the Code. This finding shall not be subject to protest or appeal.

Due to time constraints, logistics and year-end award presentations, protests filed at the final Event of the Championship season may be declined at the discretion of the Stewards.

16.2 Appeals

Appeals shall be made in accordance with, and the appeals process shall be governed by, these Sporting Regulations and Article 15 of the Code. Appeals shall be accompanied by a deposit of $2,500.00 made out to SCCA Pro Racing.

16.2.1 Jurisdiction

Jurisdiction for appeals lies with the national court of appeal. The judgement of the national court of appeal is final and not subject to any further appeal.

SCCA Pro Racing shall nominate an appeals board, who will constitute the national court of appeal, to hear the case.

16.2.2 Appeal Procedure Before the National Court of Appeal

a. The right to bring an appeal to the national court of appeal expires 96 hours from the moment the Stewards are notified of the intention to appeal on condition that the intention of appealing has been notified in writing to the Stewards within one hour of the publication of the decision.
b. SCCA Pro Racing reserves the right, in its sole discretion, to evaluate the merits of an appeal before referring it to the national court of appeal.
c. The national court of appeal must give its decision within a maximum of 30 days.
d. All parties concerned shall be given adequate notice of the hearing of any appeal. They shall be entitled to call witnesses, but their failure to attend the hearing shall not interrupt the course of the proceedings.

e. Due to time constraints, logistics and year-end award presentations, appeals will not be heard concerning decisions at the final Event of the Championship season.

16.2.3 Form of Appeal Before the National Court of Appeal

a. Any notice of appeal before the national court of appeal shall be in writing and signed by the appellant or by their authorized agent. Appellants may utilize the Championship Appeal Form (available on the Championship website and at the Championship trailer).
b. An appeal deposit becomes due from the moment the appellant notifies the Stewards of the intention of appealing and remains payable even if the appellant does not follow up the declared intention to appeal.
c. The deposit must be paid within 96 hours counting from the moment the Stewards are notified of the intention to appeal. Failing this, the appellant's right to appeal will have been forfeited.
d. If the appeal is disallowed or if it is withdrawn after being brought, no part of the appeal deposit shall be returned.
e. If judged partially founded, the deposit may be returned in part, and in its entirety if the appeal is upheld.
f. Moreover, if it is proved that the author of the appeal has acted in bad faith, SCCA Pro Racing may impose upon them any of the sanctions or penalties laid down in the Sporting Regulations and/or the Code.

16.2.4 Cost and Publication of Judgement

The Appellant(s) may, in the sole judgement and discretion of the court of appeal, be liable for the costs incurred by the court of appeal in the preparation for and conduct of the hearing.

SCCA Pro Racing shall have the right to publish or have published the outcome of an appeal and to state the names of all the parties involved. Without prejudice to any right of appeal, the persons referred to in such notices shall have no right of action against the FIA or SCCA Pro Racing or against any person publishing the said notice.

16.2.5 Appeals may not be made against decisions concerning the following:

a. Penalties imposed under Articles 15.3 (a), (b), (c), (d), (e), (f), (g), (h), (i), (j), or (k) including those imposed during the last five minutes or after the end of a race.
b. Any penalty imposed under Article 31.4.
c. Any decision taken by the Stewards in relation to Article 34.4.
d. Any penalty imposed under Articles 36.7 or 40.7.

17. SANCTIONS

17.1 The Stewards may impose the penalties specifically set out in these Sporting Regulations.

17.2 Any driver who receives three reprimands in the same Championship season will, upon the imposition of the third, be given a ten-grid place penalty for the start of the driver's next race. If the third reprimand is imposed following an Incident during the last race of an Event the ten-grid place penalty will be applied for the start of the driver's first race at the next Event.

The ten-grid place penalty will only be imposed if at least two of the reprimands were imposed for a driving infringement.

17.3 The Stewards may impose team reprimands. Any team that receives reprimands in the same Championship season will be issued a fine as follows:

a. 1-2.99 car average entries – after every three team reprimands are issued a fine of $500 will be levied.
b. 3-3.99 car average entries – after every four team reprimands are issued a fine of $500 will be levied.
c. 4 or more car average entries – after every five team reprimands are issued a fine of $500 will be levied.

Average team entries are calculated at the time a reprimand is issued and include both F4 and FR cars.

17.4 In addition to any penalty applied, the Stewards may impose penalty points on a driver's license. If a driver accrues 12

or more penalty points his license will be suspended for the next Championship race, following which six points will be removed from his license. Penalty points will remain on a driver's license thru the end of the current Championship season, after which they will be removed.

18. CHANGES OF DRIVER

18.1 Any driver already nominated by one team, who then wishes to drive for another team entered in the Championship after the completion of the first official event and before the end of the final event of the season, must first satisfy PMH that this is being done with the consent of the original team. If there is no such consent PMH will decide, at its absolute discretion, whether such a change may be made.

18.2 Before the end of initial scrutineering each Competitor must specify which of his drivers will be driving which cars. After this point, no changes may be made to the original allocation without approval from PMH.

19. DRIVING

19.1 The driver must drive the car alone and unaided.

19.2 The driver is not permitted to participate in any additional practice, qualifying or race within the Event in the Championship car, except when authorized by the Stewards.

19.3 Drivers must make every reasonable effort to use the track at all times and may not deliberately leave the track without a justifiable reason. For the avoidance of doubt the white lines defining the track edges are considered to be part of the track. Perimeter curbs are not considered part of the track. A driver will be judged to have left the track if no part of the car remains in contact with the track. Should a car leave the track the driver may re-join, however, this may only be done when it is safe to do so and without gaining any advantage either in car positions or time.

19.4 More than one change of direction to defend a position in not permitted. Any driver moving back towards the racing line, having earlier defended his position off-line, should leave at least one car width between his own car and the edge of the track on the approach to the corner.

19.5 Any driver defending his position on a straight, and before any braking area, may use the full width of the track during his first move, provided: (1) no significant portion of the car attempting to pass is alongside his, and (2) he does not prevent a legitimate overtaking maneuver. While defending in this way the driver may not leave the track without justifiable reason. For the avoidance of doubt, if any part of the front wing of the car attempting to pass is alongside the rear wheel of the car in front, this will be deemed to be a "significant portion".

19.6 Maneuvers liable to hinder other drivers, such as deliberate crowding of a car beyond the edge of the track, or any other abnormal change of direction, are not permitted.

19.7 When entering the braking zone, it is the responsibility of the overtaking car to complete a successful pass.

19.8 As soon as a car is caught by another car which is about to lap it during the race, the driver must allow the faster driver to pass at the first available opportunity. If the driver who has been caught does not allow the faster driver to pass, waved blue flags will be shown to indicate that he must allow the following driver to overtake. If the lapped car does not obey the blue flag, he may be given a black flag or a time penalty.

19.9 No car may be driven unnecessarily slowly, erratically, or in a manner which could be deemed potentially dangerous to other drivers or any other person at any time. This will apply whether any such car is being driven on the track, the pit entry, pit lane, pit exit, or the paddock.

19.10 Causing a collision, repetition of serious mistakes or the appearance of a lack of control over the car (such as leaving the track) will be reported to the Stewards and may entail the imposition of penalties up to and including the suspension of any driver concerned.

20. LIVERY

20.1 Each car must carry the race number of its driver, as published by PMH, on the nose of the car and on each rear wing end plate as described in 20.6. The numeric digit(s) must be nine inches tall, and the font must be bold in nature. The panel must contrast with the number and car color. PMH recommends using a black or white panel behind the number and reserves the right to require a change.

20.2 All car numbers are owned by PMH. A Competitor may be granted the use of a car number.

20.3 All Competitors desiring a particular car number must make a written request to PMH. PMH will not guarantee a request will be granted.

20.4 After a car number is assigned to a particular Competitor, it will remain with that Competitor until that Competitor is no longer a full season Competitor, provided that Competitor enters a car and displays the car number on the car at each Event. If the Competitor does not enter a car and/or display the car number on the car at an Event, PMH may reassign the car number.

20.5 Car livery must meet the style guidelines and sponsor restrictions, as outlined in Appendix 4 and Article 20.9 respectively. PMH will provide an initial set of required sponsor decals with vehicle registration and additional sets or individual decals will be available for purchase throughout the season at events when needed. Cars with non-compliant decals will be referred to the Stewards for further action, including potential fines.

20.6 Nose – The bottom of the number panel should be in line with the meeting line between the shock cover and the nose for visibility. (see Appendix 4).

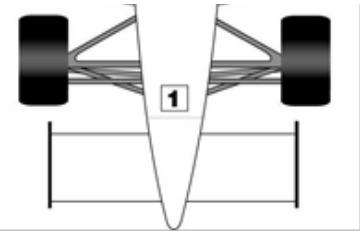

Rear Wing Endplates - The car number must be located on the side of the rear wing endplates the top of the numeric digit must be eight inches from the top of the rear wing endplate (See Appendix 4).

20.7 Every Competitor must display the name of the driver and his national flag on the bodywork, on the outside of the cockpit. These must be clearly legible and located as determined in Appendix 4.

20.8 PMH may, in its sole discretion, rule as to the suitability of a particular car, team or driver livery. This may include, but not be limited to, the advertising of alcohol or tobacco products or any livery advertising not in keeping with the youth-oriented spirit of the Championship. Competitors are required to consult with PMH in case of any questions.

20.9 Each driver will be required to display Championship specific logos in the specified locations on their racing overalls at all times during each Event and test sessions immediately preceding the Event in accordance with the diagram set out in Appendix 5.

Drivers presenting with non-compliant suits, shirts, and/or jackets (including competing series logos) will receive one warning and a reprimand from the stewards per season. A $500 fine will be issued to the driver for each occurrence after that Event. Drivers standing on the podium with non-compliant suits, shirt, and/or jacket will forfeit any prize money, without a warning.

20.10 Each team member will be required to display Championship specific logos in the specified locations on their crew shirts

and/or jackets at all times during each Event and test sessions immediately preceding the Event in accordance with the diagram set out in Appendix 6.

Team shirts and/or jackets are only required for those members who cross over what is defined as the hot wall servicing the car and/or driver. Team members in non-compliant team shirts and/or jackets (including competing series logos) will receive one warning and a team reprimand per season. A $500 fine will be issued to the Competitor for each occurrence after that Event.

20.11 Trailer livery must feature the Championship logos and comply with Appendix 7. PMH will supply decals as requested when a team registers for the Championship.

21. TESTING RESTRICTIONS

21.1 Beginning 14 days before the start of the first official event of the current season, no Championship driver may test or race a Championship car prior to any Championship Event, on any configuration of any track that will host a Championship Event, during the current season. Testing is permissible at such tracks after the close of the Championship Event activity, until 14 days before the start of the first official event of the following calendar year.

21.2 Exceptions to the testing ban include:

a) PMH or ACCUS member club sanctioned events held more than 2 weeks prior to a Championship Event. Competitors participating in the SCCA-sanctioned event may participate in the test day immediately preceding the event, regardless of who sanctions it.
b) On the day preceding an Event, a test of no more than four on-track hours in total duration can be organized by PMH and must be open to all competitors
c) Testing is permissible at any PMH-organized or SCCA Pro Racing sanctioned test event or promoter/pre-event test day, as outlined on the official schedule.
d) SCCA National Championship Runoffs and Runoffs Test Days

21.3 All test data must be turned in per the Honda guidelines.

21.4 Wind tunnel testing is the testing by a Team or any Related Party of that Team, or any agent or sub-contractor of the Team or any of its Related Parties, in a test environment of a representation of an FR car or subcomponent in order to measure, observe or infer any forces, displacements, pressures or air flow direction resulting directly or indirectly from the incident air flow.

Any wind tunnel testing is forbidden. This also applies for wind tunnel testing using a scale model of a FR car or subcomponent.

It is forbidden to use any results from wind tunnel testing obtained by a Team or any Related Party of that Team, or any agent or sub-contractor of the Team, any of its Related Parties or any other Third Party other than the wind tunnel testing results supplied by the rolling chassis manufacturer.

21.5 Aerodynamic Data

a) No rolling chassis may be used in the Championship unless the company supplying such rolling chassis accepts and adheres to the following conditions.
b) Aerodynamic data must be made available for all Competitors

21.6 Rig Testing is the testing by a Team, any Related Party of that Team, or any agent or sub-contractor of the Team or any of its Related Parties, in a test environment, of a Championship car or subcomponent in order to measure, observe, or infer any forces, torques, stresses, or displacements resulting directly or indirectly from dynamic or static application of forces or displacements. Examples of rig testing include, but are not limited to, 4- and 7-post, kinematics and compliance, pulldown, and tire force and moment.

Rig testing is forbidden, with the exception of testing dampers on a dynamometer. This also applies for rig testing

using a scale model of a Championship car or subcomponent.

It is forbidden to use any results from rig testing obtained by a Team or any Related Party of that Team, or any agent or sub-contractor of the Team, any of its Related Parties or any other Third Party other than results supplied by the rolling chassis manufacturer.

22. PIT ENTRY, PIT LANE AND PIT EXIT

22.1 The section of track between the first safety car line and the beginning of the pit lane will be designated the "pit entry".

22.2 The section of track between the end of the pit lane and the second safety car line will be designated the "pit exit".

22.3 Leaving the pit lane and re-joining the track must be done without endangering or hindering other participants. It is strictly forbidden to cross the white line at the pit entry or exit with any part of a car when entering or leaving the pits.

Any driver crossing the white line at the pit exit or entry during practice, qualifying or a race will be given a penalty under Article 15.3.

22.4 The pit lane is defined as being in three sections, the fast lane, the ~~slow~~ transition lane and the pit boxes. The fast lane is the lane closest to the outer pit wall. The pit boxes are located closest to the inner pit wall. The ~~slow~~ transition lane is between the fast lane and the pit boxes. While in the pit lane cars shall not move from the fast lane to their pit box until within three pit boxes of their assigned pit box. Work can only be performed on the cars when entirely in their assigned pit boxes.

22.5 Any car(s) driven to the end of the pit lane prior to the start or re-start of a practice session, or any car(s) required to stop at the pit exit during a safety car period, must form up in a line in the fast lane and leave in the order they got there unless another car is unduly delayed.

22.6 Any driver that is required to start the race from the pit lane must stop in a line in the fast pit lane after completion of the formation lap.

When cars are permitted to leave the pit lane they must do so in the order that was established under Article 36 unless another car is unduly delayed. At all times drivers must follow the directions of the marshals and officials.

22.7 Other than drying, sweeping or any tire rubber left when cars leave their pit stop position, Competitors may not attempt to enhance the grip of the surface in the pit lane unless a problem has been clearly identified and a solution agreed to by the Race Director.

22.8 Competitors must not paint lines on any part of the pitlane or otherwise mark their positions with tape or similar means.

22.9 A car may enter or remain in the fast lane only with the driver sitting in the car behind the steering wheel in his normal position even when the car is being pushed.

22.10 All pressured air bottles and associated hoses in the pits must be stowed safely and may only be brought into the pit lane immediately before they are required for work on a car and must be removed as soon as the work is complete. All air bottles and gas cylinders must have a protective structure around their gauges and valves at all times when the manufacturer's metallic screw-on valve cover is not in place. The proper components and accessories must be used with air bottles and gas cylinders at all times. No home-built or modified items may be used.

22.11 Pit structures, timing stands, etc., must be mobile, not depending on the pit wall for structural integrity, or placed in such a manner that they create a hazard. When broken down into its shipping configuration, all pit structures must fit inside a team's transporter such that it does not require separate shipping via a freight company. Pop-up tents may be used provided they do not create a safety hazard and have a secure anchoring system. Teams may NOT leave their equipment in pitlane between their on-track sessions because teams from all the series at the event must have access

to their assigned pit boxes for their on-track sessions.

22.12 Team Personnel Protocols

a) No one shall stand, crouch, or sit on any pit lane wall while vehicles are on course.
b) Smoking, including e-cigarettes, is not allowed at any time in the pits, or inside a garage.
c) Pets are always prohibited in pit lane, except service animals expressly authorized by the Championship.
d) Everyone in the pit area must be properly attired with closed-toed shoes, long pants, and sleeved shirts while in the pit lane, unless otherwise approved in the Event Supplemental Regulations.
   e.) All personnel must have their Series issued credential prominently displayed at all times. Any person(s) without proper credentials will be asked to leave pit lane during on-track sessions.

22.13 Pit Exit Protocol

a) It is the responsibility of the team to release their car from a pit stop position only when it is safe to do so.
b) If a car is deemed to have been released in an unsafe manner or condition during a session, a penalty may be issued to the driver and/or team under Article 15.3.
c) An additional penalty will be imposed on any driver who, in the opinion of the Stewards, continues to drive a car knowing it to have been released in an unsafe condition.
d) Any behavior which may endanger individuals in pit lane, (e.g.: tire warming) is prohibited

In all of the above cases, a car will be deemed to have been released when it has been driven out of its designated pit box following a pit stop.

22.14 Under exceptional circumstances the Race Director may ask for the pit entry to be closed during the session for safety reasons. At such times drivers may only enter the pit lane in order for essential and entirely evident repairs to be carried out to the car. Vehicles already in the pits during a pit emergency must obey the instructions of Officials.

22.15 A speed limit of 40 mph will be enforced in the pit lane. Any driver who exceeds the limit will be subject to penalty. The Stewards or Race Director may impose an additional penalty if they suspect a driver was speeding in order to gain any sort of an advantage. During the race, the Stewards or Race Director may impose either of the penalties under Article 15.3 (a) or (b) on any driver who exceeds the limit.

22.16 While in pit lane, a car may only reverse under its own power with the supervision of pit lane officials.

22.17 Competitors are not permitted to install and/or to use any electric devices or time-recording instruments on the pit wall within 25 yards of the start/finish line. Any equipment installed by a Competitor on the pit wall must not protrude from the pit wall and over the track

22.18 Pit Stop Procedures

a) Before the vehicle stops at its assigned pit, only one crew member, acting as the pit stop supervisor, may be over the wall to signal the Driver into the pit box. All other personnel and equipment must remain behind the wall until the vehicle stops in its assigned pit (e.g., no objects may be placed on the pit wall until the vehicle has come to a complete stop).
b) For any pit stop during an Event, there will be a maximum of 3 crew members permitted over the wall at any given time. All crew members over the wall may work on the car, and a crew member shall be responsible for the car's safe release. Identifiable service company representatives examining a vehicle's components, may also be over the wall
c) It is the team's responsibility to have an operable fire extinguisher in its pit area (one per vehicle to a maximum of three) any time the vehicle is on track, or in the pits. The fire extinguisher must be ABC-type, and minimum 10-lbs in size. If any fire extinguishers are supplied by the organizer, they are not to be counted in the team's required number of extinguishers.
d) Pit carts, ATVs, tugs, viewing stands, tool carts, etc. must be clearly marked with team name for easy identification. Unless given specific permission by an Official, these types of vehicles shall not be driven onto the hot side of pit lane.
e) Only one team member per participating car is allowed in the signaling area during any session. The signaler is only

allowed in the signaling area for one lap. No team members are allowed in the signaling area during the start or restart of a race or during the first preceding lap of either situation.

f) Each team will be fully responsible for ensuring that all personnel and equipment are clear of the vehicle before it is lowered, and/or released. A team, and/or Driver, may be penalized if its vehicle contacts any personnel, parts, equipment, or other vehicles in pit lane. They may also be penalized if any parts, or equipment come off the vehicle at any time while in pit lane, or while on-track.

g) Vehicles may not be removed to the paddock area from the course, or the pits, during a Qualifying session, or Race, without the specific permission of the Race Director, or the Technical Director. A vehicle removed without permission may lose credit for any times established up to that point, plus additional Penalties as may be determined

h) No tool, or equipment, which may generate sparks, or a high temperature, will be allowed in the pits. Cordless tools are allowed so long as their use does not generate sparks, or a high temperature.

i) Safety stands must be used when any part of the vehicle is raised off the ground, and any part of a person's body is under the vehicle. If the vehicle is stationary, all four tires are on the ground and the ignition is turned off, safety stands are not needed for work to be performed under the vehicle. Tire changes are exempt as long as no other work/adjustment is being performed.

j) The addition of lubricants and coolant is allowed provided the Technical Director is notified prior to the addition, and he is satisfied that no additional leakage will occur when the vehicle re-enters the track.

k) Neither fuel containers, nor refueling, is allowed in pit lane, at any time.

l) Each Entrant must be prepared to handle gasoline, water, and oil spillages in their pit.box. Spillage, or careless handling of fuel, water, or oil may result in a fine, or other Penalty being assessed.

m) At the conclusion of each session, under the direction of the Officials, each team must promptly remove its vehicle(s) and pit equipment to the paddock, unless pre-arranged. Under no circumstances should pit equipment, or race cars, be left unattended at any time.

23. REGISTRATION, SCRUTINEERING AND SPORTING CHECKS

23.1 All driver credentials and licenses must be presented to the Registrar at the start of each Event, including:

a. Competitor's and driver's licenses and any related documents.

b. SCCA Pro Racing authorization for foreign license holders (applicable for licenses not issued by SCCA Pro Racing or a membership country of the EC or an associated country).

23.2 Drivers with medical irregularities are obliged to submit written notification to the Championship before the first practice session begins. This information must include the driver name and number of the race car. Participants with injuries or temporary handicaps are obliged to contact the Championship immediately.

23.3 During initial scrutineering, and at any time during the Event, each Competitor may be asked to present all documents required by Article 23.1 above.

23.4 Initial scrutineering of the car will take place at the Championship trailer or in the team's paddock as specified in the pre-event communications and focus on verifying all required safety equipment is fully operational before the first official practice session.

23.5 Race numbers, required decals, and any official advertising must be on the car for inspection during initial scrutineering.

23.6 No car may take part in the official on-track sessions until it has been approved by the scrutineers and received its Event Decal. Violation of this rule will be referred to the Stewards.

23.7 The scrutineers may:

a. Check the eligibility of a car or of a Competitor at any time during the Event.

b. Require a car to be dismantled by the Competitor to make sure that the conditions of eligibility or conformity are fully satisfied. Non-compliant components may be retained by the Championship without compensation or recourse to the Competitor.

c. Require a Competitor to supply them with such parts or samples as they may deem necessary. Failure to

surrender parts or samples within the time specified by the scrutineers and/or the Stewards will result in disqualification and a fine.

23.8 Any car which, after being passed by the scrutineers, is dismantled or modified in a way which might affect its safety or call into question its eligibility, or which is involved in an accident with similar consequences, must be re-presented for scrutineering approval.

23.9 The Race Director or Clerk of the Course may require that any car involved in an accident be stopped and checked.

23.10 After each race and all qualifying practice sessions at least three classified cars will be selected to undergo scrutineering. Following an Event, the Technical Delegate will publish a scrutineering report detailing which cars underwent scrutineering and what was inspected on each car. This report will be made available via the official communication channels of the Championship.

23.11 Checks and scrutineering shall be carried out by duly appointed officials who shall be responsible for the operation of the parc fermé and who alone are authorized to give instructions to the Competitors.

23.12 The Stewards will publish the findings of the scrutineers each time a car is found to be in breach of the Technical Regulations during the Event.

23.13 A tutoring service performed by instructors designated by SCCA Pro Racing or PMH will be put in place. Competitors agree that the selected channels of data and video can be used by instructors appointed by SCCA Pro Racing or PMH at the service of drivers' tutoring. The selected channels of the fastest driver from the top two teams after qualifying will be made available for download to teams registered for the current season.

23.14 During any qualifying or race session, and prior to the display of the checkered flag, a car that no longer wishes to complete laps on track must return to the pit lane and wait in its designated pit box until the end of the session.

Cars wishing to return to the paddock early may only do so with approval from the Race Director or Technical Delegate. Any car that returns to the paddock early and without such approval shall be subject to disqualification and forfeiture of all lap times set during the session.

24. TIRE USAGE DURING THE EVENT

24.1 Hankook is the official tire of the FR Americas Championship. The requisite tires are

a. Front tire (dry) – Ventus F200 230/560R13, C72 compound
   Front tire (wet) – Ventus Z217 230/560R13, W52 compound
b. Rear tire (dry) – Ventus F200 280/560R13, C72 compound
   Rear tire (wet) – Ventus Z217 280/560R13, W52 compound

24.2 Tires must be purchased from the following supplier:
Hankook Motorsports
10808 FM 1625
Austin, TX 78747
FRf4@hankookmotorsports.com
305-809-0356

24.3 Only the dry-weather tires which have been provided at the Event by the appointed supplier and declared by the team may be used for qualifying and race sessions during the Event.

Competitors may transport wet-weather tires from one Event to another provided they were allocated to them by the appointed supplier.

24.4 Any modification or treatment including cutting, grooving, the application of water, solvents or softeners, or the use of

heat retaining (and/or cooling) devices is prohibited. This applies to both wet- weather and dry-weather tires.

At his absolute discretion, the Technical Delegate may enforce parc fermé conditions on tires at any time. To ensure that tires have not been treated, or modified, samples may be taken from the tire tread for analysis and comparison with a tire taken directly from the supplier's stock.

24.5 A set of tires is considered to be comprised of two front and two rear tires. Unless otherwise specified by the Championship, each driver may use for qualifying and races no more than two (2) sets of new dry weather tires for an Event counting two (2) or more races.

Dry-weather tires used for testing and practice do not need to be declared or scanned. Drivers may use one new set of dry weather tires for the official practice sessions.

There is no restriction on the use of wet weather tires, and they never need to be declared or scanned.

24.6 A Competitor wishing to replace an already marked unused tire by another identical unused one must present both tires to the Technical Delegate for marking and scanning.

24.7 In the case of a tire damaged on track, the Technical Delegate may approve the replacement of the damaged tire with a scrubbed tire used in testing or official practice. The Competitor must present the damaged tire and the desired replacement tire to the Technical Delegate for approval. The replacement tire, if approved, will be scanned, and marked.

24.8 If an approved bar coding is not used on the outer sidewall of each tire or, at the request of the Competitor on both sidewalls, the Scrutineers will paint the race number of the driver as well as a letter characterizing the Event

24.9 The use of tires without appropriate identification may result in a grid position penalty or disqualification from the race.

24.10 Tires may only be inflated with air or nitrogen.

24.11 All tires, when under the control of a team, must remain visible within the team's designated paddock or transporter area at all times.

24.12 The pit lane marshals will supervise tire changes in the pits.

24.13 Teams must check tire pressures and temperatures prior to the checkered flag during qualifying and race sessions.

24.14 Before delivering wheels to the Hankook Motorsports truck to have tires mounted, the wheels must be clean, and each wheel must be marked with the car # and team name so the ownership of the wheels can be easily recognized.

25. MINIMUM CAR WEIGHT AND TECHNICAL INSPECTION

25.1 The minimum weight of the car must not be less than 673.6 kg or 1485 lb with all car safety equipment.

25.2 The minimum weight of the car plus driver with all required safety equipment at any time during competition shall be 757.5 kg or 1670 lb.

25.3 During each qualifying and race session cars will be weighed as follows:

a) The official scales will be located at the scrutineering area at the Championship trailer next to Parc Fermé.
b) The top three cars, as well as random cars, will be selected to undergo the weighing procedure. The Technical Delegate, or his designee, will inform the team and/or driver that his car has been selected for weighing.
c) Having been signaled that his car has been selected for weighing, the driver will proceed directly to the weighing area and stop his engine.
d) Once a driver gets his Official Weight recorded in his driver's gear for the Event, he need not report to scrutineering again, unless requested to do so by the Technical Delegate, or his designee.

e) The car will then be weighed and the result given to the team and/or driver.
f) If the car is unable to reach the weighing area under its own power, it will be placed under the exclusive control of the marshals who will take the car to be weighed.
g) A car or driver shall not leave the weighing area without the consent of the Technical Delegate or his designee.
h) If a car stops on the circuit and the driver leaves the car, he must contact the scrutineers immediately on his return in order for his weight to be established, unless he has already had his Official Weight recorded.

25.4 When a driver gets his Official Weight recorded, the Technical Delegate, or his designee, will tell the driver his weight and, once the driver leaves the scrutineering area, this will be deemed implicit acceptance of the figure.

25.5 The relevant car may be disqualified should its weight be less than that specified in Article 25.1 or 25.2 of the Sporting Regulations when weighed under Article 25.3 or 25.4 above, except where the deficiency in weight results from the accidental loss of a component of the car.

25.6 Once a car is directed to parc fermé, nothing may be added to, or removed from, the car except for the driver, his equipment, and any approved auxiliary cooling devices, unless directed to do so by the Technical Delegate, or his designee.

25.7 Only Officials and team members of the car currently being weighed may enter the weighing area.

25.8 In the event of any breach of these provisions for the weighing and technical inspection of cars, the Stewards may penalize the driver as they consider appropriate.

26. GENERAL CAR REQUIREMENTS

26.1 Only chassis, gearboxes and engine installation kits complying entirely with the following homologations may be used during official test days and Events.
a) Chassis Homologation No: TBD
b) Gearbox Homologation No: TBD
c) Engine Installation Kit Homologation No: TBD

Once supplied, the components must not be modified in any way whatsoever except where specifically permitted by the Technical Regulations, or except in the case of automobiles adapted for disabled Drivers in possession of a Certificate of Adaptations issued by the FIA, or with the written permission of SCCA Pro Racing and PMH after consultation with the manufacturer. Modifications to the automobile in accordance with the adaptations specified in the Certificate of Adaptations are authorized. Other modifications will only be permitted if they are deemed absolutely necessary after a problem has been clearly identified.

The entire car, as both an assembly and individual parts, must remain “as delivered”, except for changes expressly permitted in writing by the Championship via the following:
a) Championship Supplemental Regulations for an individual Event
b) Championship Technical Regulation Bulletins (TRB) issued during the current season
c) Current FR Americas Championship Sporting Regulations
d) Ligier Automotive and HPD Technical Bulletins from any date of issue
e) FIA homologations for chassis, gearbox, and engine
f) Current FIA FR Technical Regulations

Examples of changes from “as delivered” include, but are not limited to, required or optional manufacturer updates, addition/substitution/omission of parts, modifications of any sort to individual parts or their manner of assembly.

26.2 Technical Regulation updates
a. Rules implemented by prior season’s Championship Technical Bulletins are no longer valid, unless included in these current rules.
b. Changes based on communications from HPD, Ligier, Hankook or their subcontractors are only permitted after they

are issued in writing by the Championship. These actions include, but are not limited to, changes from as-delivered configuration, service by parties other than authorized providers, seal removal, and engine or chassis replacement. These communications include, but are not limited to, verbal, email, text, and written documents, whether official bulletins or otherwise. Further, per Article 26.2c, rules in the Sporting Regulations override any documents or communications from HPD, Ligier, or their subcontractors.

c. In the event of overlap or conflict in the rules ~~in~~ and the documents listed in 26.1, the definitive interpretation will be the one contained first in the list of documents in 26.1. For example, Supplemental Regulations will override Technical Bulletins, which will override the Sporting Regulations, etc.

d. Competitor requests for revisions to car rules must be submitted to the Technical Delegate in writing or electronically using a form supplied by the Championship. Requests, if approved, will result in a Technical Bulletin covering the revised rule. All Competitors will be notified of denied requests.

26.3 Specific Car Requirements

Teams may repair components defined as bodywork in Section 1.4 of the FIA Technical Regulations, except for the survival cell, radiators, wing mounting structures, wing internal structures, wing endplates, front crash box, and rear attenuator. Consistent with Section 2.7.1 of the FIA Technical Regulations, repairs to all other Type 1 components must be performed by the manufacturer or their designated representative. Team repairs must, at the judgment of the Technical Delegate, be limited to correcting damage or routine wear and tear, and cannot change the function or the performance of the part or car

The FIA considers fasteners to be Type-3 parts and therefore are free to be replaced with parts that have equivalent, or better, mechanical specifications and equivalent dimensional specifications. The Technical Director considers fasteners as regular maintenance items like lubricants, etc. Therefore, fasteners need not maintain the same physical dimensions as the OE fasteners. However, any fastener used must have the same, or better mechanical specifications as the OE fastener, and may not perform a prohibited function.

26.3.1 Safety Equipment

a) The arming switch for the fire suppression system must be in the ON position whenever the car is on track during a Championship Event. It may not be switched off while the car is under parc fermé conditions.

b) The fire suppression bottle must be mounted in such a way that with the seat components removed, the gauge may be seen with the use of a bore scope without removing the access panel.

c) It is permitted to enlarge the lap belt clearance hole in the extraction seat to allow attachment of the belts to the forward anchor points in the monocoque. It is also permitted to create a shoulder belt clearance hole in the extraction seat to allow attachment of the belts to the lower anchor points in the monocoque. The seat and insert must be able to be removed without using tools.

26.3.2 Chassis & Bodywork

a) Color may only be added by paint, powder coat, and vinyl wrap or decal. Color may only be added to externally visible parts such as: body panels, wings, endplates, component covers, and wheels, but not to the floor assembly. The “floor assembly” does not include the wood skid plate. The wood skid plate may be painted to allow teams to better track where the wood skid plate is rubbing.

b) The use of tape, film, and other removable adhesive products on bodywork is only permitted for the following:

i. Wrap material and decals applied for the exclusive purpose of coloring and graphics

ii. To secure the shock cover, the roll hoop cover, and side pod covers. Teams choosing to use tape/adhesive to secure any of these covers are limited to using two (2) 6” long strips per cover.

iii. On forward-facing surfaces to protect from damage, provided it serves no other purpose

iv. To control air flow **into** the side pod inlets if the ambient air temperature **is** 55°F, or less, within one hour of a track session.

v. As temporarily applied on pit lane under the supervision of an official to secure damaged bodywork.

26.3.3 Transmission

a) Only the following sets of gears ratios may be used during official test days and Events.

Gear No.	Tooth Count 1	Tooth Count 2	Gear Ratio (TC1/TC2)
1	36	16	2.25

2	30	18	1.67
3	28	21	1.33
4	28	25	1.12
5	27	28	0.96
6	24	29	0.83

b) The gearbox must be used exactly as supplied from Ligier/SADEV with the following exceptions:
   i. The SADEV SL82-14LW gearbox will not be sealed to allow teams to service/repair their gearboxes.
   ii. The gears and internal components located in the rear section of the gearbox may be REM finished to help with the durability of 5th gear. No additional modifications to the gearbox internals will be tolerated.
   iii. The ring & pinion may be serviced/repaired by the team. Any parts replaced must be the homologated direct replacements sold by Ligier/SADEV. However, the ring & pinion may be deburred to remove the sharp edges found on the new parts. The ring & pinion may also be REM finished.
   iv. The differential, and any other gearbox internals located in the front half of the gearbox, and not specifically allowed to be modified in these rules, must be used as delivered from Ligier/SADEV.
   v. The differential may be serviced/repaired by the team. Teams must use all the parts supplied in the differential (e.g., The eight friction plates installed on each side of the differential must all be used as supplied.) The parts must be used as delivered from Ligier/SADEV.
   vi. While using different parts, or a different number of parts, than originally supplied is not permitted, specifications that can be adjusted, such as pre-load, etc. may be adjusted while servicing the differential.
   vii. The supplied differential ramps have two positions they can be mounted in. As both positions are close enough to not cause a significant difference in performance, either mounting position may be used. Alternate ramps may not be installed.
   viii. It is recommended that teams "life" the circlip that retains the differential to avoid failures.
   ix. Inspection of the gearbox internals will be a standard technical inspection item. Teams must have the tools/supplies to remove and reinstall the internal gearbox parts as instructed by the Technical Delegate or his designee.
   x. Any team servicing their own gearboxes will be considered to be entirely at fault if any damage occurs due to the improper installation of any parts. No consideration will be given to the team by the Series, Parella Motorsports Holdings, Ligier, or SADEV.
   xi. The penalties for intentionally modifying a gearbox outside of those modifications allowed in Article 26.3.3 will include the loss of all points for that Event and a $5,000 team fine.

c) Teams may install additional ductwork in the side pod to direct air to the gearbox oil cooler more efficiently. This ductwork may not alter the external appearance of the car or require modifications to the bodywork, or chassis, beyond that required to mount the ductwork.

d) Teams may space the gearbox oil cooler back from the radiator to promote more efficient cooling of the gearbox oil. Relocation of the gearbox oil cooler may not require modifications to the bodywork, or chassis, beyond that required to securely mount the gearbox oil cooler in its new location.

e) Teams may install a heating element on the external underside of the gearbox case to preheat the gearbox oil. This heating element may only be used while the car is in its paddock space.

f) Teams may install hardened inserts into the mounting holes that are in the gearbox case for the rear wing. This is allowed to eliminate the problem of the wing mounting bolts pulling out of the case.

26.3.4 Suspension, Wheels, and Brakes

a) The use of the rear suspension pickups points as shown in the homologation is mandatory. Helicoils may be used to repair the suspension mounting points in the transmission case.

b) One link may optionally be removed from either or both of the anti-roll bars. If a link is removed, the other link and the bar must remain in place.

c) All shocks used in official sessions are required to have the Championship labeled cable seals installed. If a team has any shocks that still have the blue wire seals installed, those shocks must be sent back to JRI to be resealed before the 2023 Road America event.

d) Due to the wheel bearing design used in the uprights, teams may service the wheel bearings in lieu of replacing them.

e) It is critical that only the current style F3 Steering Arm with a bellow-bottom is in use. The additional clearance combats potential interference. See Ligier JS F3 Technical Bulletin #14 for image example.

26.4 The Championship-issued Accident Data Recorder (ADR) and Cockpit Yellow Light System (CYL) must be fitted to the car in the approved location and must be in working order at all times during the Event. These two items must be returned to the Technical Delegate after the final event that car will compete in each year. Failure to do so will result in a fine.

26.5 Telemetry is not allowed.

26.6 During all on-track sessions, radio communication is required at all times between the driver and the Competitor's pit. Each Competitor's pit must also listen to the Race Control frequency. All in-car radios must be programmed so the driver can hear the Race Control "Call All" digital radio channel as a priority channel, overriding any other radio traffic. One team member in the Competitor's pit must also listen to the Race Control "Call All" digital radio channel. Scrambling or encoding of radio transmissions is not permitted. Car-to-Car radio communication is not permitted.

26.7 The Championship requires the use of MyLaps timing transponders which must be fitted to the car in the approved location and be operating properly during all on-track sessions. Cars without properly operating transponders will not receive official times.

26.8 All Competitors must use the factory supplied data logging system. Logged data may not be downloaded or cleared during parc fermé. Teams must clear the memory of their ECU and DA3 Chassis Logger before the start of each qualifying or race session to speed up the post-session data downloading process. Teams must make sure that all GEMS logged data channels are operating properly. If a channel is not working, the team must replace the sensor, and/or repair the wiring, to get that channel operational again. This applies even if the team does not use the data from that channel. Teams may install sensors of equal, or higher, quality, provided they perform the function of the sensor supplied with the car.

26.9 A video camera of any manufacture may be used. One camera must be installed and mounted on the top of the main roll hoop facing forward, angled so that the image shows the track and the driver's hands and will be known as the official camera. The official camera must be operating during all sessions at an Event and must record in MP4 or MOV file formats using a Micro SD or SD card. Other than a date and time stamp, the camera may not log any other data or overlay it on the video image.

Nothing may obstruct the camera picture, and the video image must be properly oriented. Additional video cameras, if used, may not be mounted to the exterior or interior of the driver's helmet.

Competitors must always ensure the functionality of the official camera and are required to submit video cards from the official camera to the Stewards of the Meeting within 15 minutes of the end of each session. See Article 46 for detailed procedure. Failure to comply will result in a report to the Stewards and may result in a penalty.

26.10 During the entire Event, no screen, cover or other obstruction which in any wayobscures any part of a car will be allowed at any time in the paddock, garages, pit lane or grid, unless it is obvious that any such covers are needed solely for mechanical reasons, which could, for example include protecting against fire.

In addition to the above, the following are specifically not permitted:

a. Engine, gearbox, or radiator covers while engines are being changed or moved around the garage.
b. Covers over spare wings when they are on a stand in the pit lane.
c. Parts such as (but not limited to) spare floors, fuel rigs or tool trolleys may not be used as an obstruction.

The following are permitted:

a. Covers which are placed over damaged cars or components.
b. A transparent tool tray, no more than 50mm deep, placed on top of the rear wing.
c. A cover over the car in the team's garage or paddock area overnight.
d. A cover over the car in the pit lane or grid if it is raining.

26.11 Noise generated by the car must not exceed 103 dB (A). Engine noise will be assessed in the following way:

a. The measuring point will be at a distance of 50 cm from and at an angle of 45 degrees to the exhaust outlet.
b. The height of the microphone will be between 40-60 cm from the ground.
c. The noise meter will be turned to "slow".
d. Measurements will be taken with the filter "A".
e. The clutch pedal must be actuated in order to prevent the gearbox from rattling.
f. The engine speed must be set at three-quarters of the maximum rpm as determined by the engine manufacturer.

26.12 SCCA Pro Racing or PMH reserves the right to restrict the number of operational staff allowed at events. The following are not considered operational staff:

a) Those exclusively connected with hospitality, team motorhomes, marketing, or public relations
b) Truck drivers with the sole duty of driving trucks
c) Medical doctors, physiotherapists, or massage therapists
d) Driver managers or driver coaches
e) Extended family beyond a driver's parents or legal guardian

27. SPARE CARS

27.1 Spare chassis are not permitted. No driver may use more than one chassis at the same event.

Except for the survival cell, as governed by the following paragraph, and the engine, which is governed by Section 28, any part of the car may be changed at any time during the Event.

The survival cell may only be changed during the Championship if the Technical Delegate and Race Director are satisfied that a change is necessary due to crash damage or material/structural failure. The decision of the Technical Delegate and Race Director in this matter cannot be protested by Competitors. Following the change, the complete car must then be re-presented for scrutineering. Any damaged survival cell must be repaired and certified by the manufacturer or their designated service representative before it can be eligible for further use.

Should the team fail to inform the Technical Delegate of a change in car or survival cell, the team will receive a $5,000 fine and the driver a penalty of 10 grid places for the next race.

27.2 The decision whether a car has been repaired or changed will be taken by the Stewards of the meeting, based upon a report by the Technical Delegate.

27.3 Any damaged car which has passed initial scrutineering may not be removed from the confines of the circuit during the remainder of the Event unless approved by the Championship.

28. ENGINE MODIFICATIONS AND USAGE

28.1 Only engines complying entirely with the following homologation may be used during official test days and Events.

Engine Homologation No: 2019-03-F3R-HRA

Once supplied, the engine may not be modified in any way whatsoever except where specifically permitted by the Technical Regulations, Sporting Regulations, or bulletins issued by the engine supplier or the Championship. Any such modifications will only be permitted if they are deemed absolutely necessary after a problem has been clearly identified.

28.2 Engine Modifications

a) The only engine oil filters permitted are the NAPA Gold (P/N: 1085), and WIX (P/N: 51085). No exterior coverings are permitted on the filter.
b) The use of Red Line Professional Series 0W-20 oil in the engine is mandatory. No alterations, or additions, to this oil is permitted. To ensure that the required type of oil is used without modification, or additives, samples may be taken from the engine for analysis and comparison with the required type.

c) Minimum allowed engine oil level is at the "3/4" line on the Ligier JS F4 dipstick, available from Ligier Automotive. Oil must completely cover the line directly above the arrowhead at the "3/4" level on the dipstick.
d) Restriction of the flow of fluid or air in any part of cooling systems is not permitted, except for restrictions expressly included in either the homologation or as optional or mandatory updates issued via manufacturer bulletins via Championship official memo/bulletin or via the manufacturer through official Championship communication channels outlined in Article 14.4.
e) Teams wishing to separate the coolant overflow from the oil overflow catch can may add a second catch can next to the one provided by the manufacturer. This catch can may be plastic, or metal, and must be securely mounted.
f) Auxiliary cooling systems, such as fans, blowers, etc. may be used to cool down vehicle components while a car is off-track. Such as when the car is in pit lane, traveling through the paddock, or sitting in parc fermé. Any such system shall be battery operated. Any such system must be removed before the car is weighed during technical inspection.
g) The fuel line and fittings between the dry break sample fitting to the high-pressure fuel pump must be replaced with the Ligier supplied kit (P/N: TBD).
h) Teams may install a heating element on the external surface of the dry sump oil tank to preheat the engine oil. This heating element may only be used while the car is in its paddock space.
i) It is strongly recommended by HPD that teams tape the seam between the air filter tray and the turbo air inlet duct to prevent debris from entering through the seam and damaging the turbo compressor wheel.
j) A catch can may be added to the cam cover breather outlet to capture any oil that may be purged through the breather.
    i. The HPD cam cover breather assembly, including the plastic orifice and metal vent, must be retained in the original location.
    ii. The catch can system should be constructed of a hose and catch can with accompanying clamps and fasteners.
    iii. Hose and can materials must be heat and oil resistant.
    iv. The hose must fit over the cam cover breather port completely and be secured with a hose clamp. The only other allowed hose connection is to the dedicated catch can.
    v. The hose must not have any type of restriction that reduces the inner diameter to less than 5/8" (kinks, restrictors, stoppers, etc.).
    vi. The can must be vented with a filter to prevent debris inflow to the engine.
    vii. The can must be mounted in front of the rear wheel centerline of the car.
    viii. The can must have a volume greater than 0.5L. The catch can must be a dedicated container separate from the existing catch tank on the car.

28.3 Once an initial engine has been declared for use in a car for all Events and official tests of the Championship, per Section 28.4, each car will be permitted a single engine change during the remainder of the Championship, regardless of reason. Any additional engine changes for any reason will result in a penalty of 10 grid places for the next race, as well as a $2,500 fine. Should there be a change in driver, owner, or team for a car during the Championship, this requirement remains with the car.

28.4 An engine will be deemed to have been used once the car's timing transponder has shown that it has left the pit lane.

28.5 The engine supplier/rebuilder will attach seals to each engine after being built/rebuilt, and prior to it being used for the first time at an Event in order to ensure that no significant moving parts can be rebuilt or replaced.

28.6 Submission of an Engine Seal Declaration Form – Each team will be required to submit an Engine Seal Declaration Form prior to qualifying at each event. The form has space to declare the engine seals for multiple cars. If no engines/seals have been changed since the last event, teams may simply copy, or print out, the same sheet they submitted at the last event. Teams that have not submitted their Engine Seal Declaration Form will not be released from post-qualifying Parc Ferme until they do so.

28.7 An engine change will be deemed to have happened if any of the seals are damaged, removed, or replaced on an engine by anyone other than the engine supplier/rebuilder after it has been used for the first time in any official session.

28.8 The Technical Delegate may require the replacement of a complete engine or any part of the engine or ECU with parts coming from the supplier's stock or the check of the complete engine on the test bench.

28.9 The Technical Delegate and the engine provider must be notified in writing in advance of removing an engine for service, repairs, or power confirmation by the provider or of replacement with a different engine. Failure to follow this procedure will result in separate penalties in addition to any penalties resulting from Section 28.3.

29. FUEL, FUEL SAMPLING AND REFUELING

29.1 Only 100 octane fuel provided at the Event by the appointed supplier as mandated by the Championship may be used throughout the Event. Any alteration to the specification of the fuel provided by the appointed supplier may result in disqualification from the Event.

29.2 It must be possible to take a minimum 100 ml sample of fuel from a car at any time during the Event according to the procedure described in Article 29.7.

29.3 All cars must be fitted with a self-sealing FIA approved connector that can be used by the scrutineers to take a fuel sample from the tank. Competitors must also provide a fuel line approximately 1.5 m long which can be used to transfer the samples into the sampling vessels.

29.4 During all refueling or fuel handling operations:

a. The relevant personnel must be wearing clothing which will provide adequate protection against fire.
b. An assistant, wearing clothing which will provide adequate protection against fire, and who is equipped with a suitable fire extinguisher of appropriate capacity must be present.
c. During refueling all other team personnel must keep a safe distance from the car.
d. All cars, refueling equipment and containers must be suitably grounded where necessary.
e. Any powered pumping system used to transfer fuel must be operated by a non-latching switch or be turned off automatically if the operator leaves.

29.5 No refueling, or removal of fuel, is permitted:

a) During qualifying, the race, or at any time prior to the completion of post qualifying or post-race scrutineering.
b) Refueling in the pits or grid area is not permitted.

29.6 Refueling or removal of fuel may only be carried out in the paddock. The driver shall not remain inside the car during the refueling process and the engine must be stopped.

29.7 Fuel samples will be taken during the Event as follows:

a. Air-tight containers will be used for the fuel samples.
b. At the beginning of every Event, a reference sample, with a minimum volume of 100 ml, will be taken from the stock of the designated fuel supplier. If the scrutineers deem necessary, fuel from the designated supplier may be resampled during the Event.
c. At any time during an Event, the Technical Delegate or his designee may take a fuel sample from any car. Samples taken from Competitors will have a minimum volume of 100 ml. These samples, in labelled containers, will be delivered to the scrutineers for testing.
d. Should the scrutineers find that fuel from a Competitor's sample deviates from the Event reference fuel standard, the Technical Delegate will submit a report to the Stewards of the Meeting for their review and decision regarding the issuance of any penalties.

30. GENERAL SAFETY

30.1 Official instructions will be given to drivers by means of the signals laid out in the Sporting Regulations. Competitors must not use flags or lights similar in any way whatsoever to these.

30.2 Drivers are strictly forbidden to drive their car in the opposite direction to the race unless this is absolutely necessary in order to move the car from a dangerous position. A car may only be removed from a dangerous position as directed by the marshals.

30.3 Any driver intending to leave the track or to go to his pit or the paddock area must signal his intention to do so in good time making sure that he can do this without danger.

30.4 During practice, qualifying and the race, drivers may use only the track and must at all times observe the provisions of the Sporting Regulations relating to driving behavior on circuits.

30.5 Other than by driving on the track, Competitors are not permitted to attempt to alter the grip of any part of the track surface.

30.6 If a car stops on the track it shall be the duty of the marshals or emergency services to remove it as quickly as possible so that its presence does not constitute a danger or hinder other Competitors. Under no circumstances may a driver stop his car on the track without justifiable reason. Drivers must not start or attempt to start the car's engine when it is being pushed or towed to a place of safety by the marshals or emergency services. If any mechanical assistance received during the race results in the car re-joining, the Stewards may disqualify him from the race (other than under Articles 30.12.(d) and 30.12.(e), 39.4, and 39.5). Drivers must follow the instructions of the marshals, emergency services, and officials.

30.7 A driver who abandons his car must leave it in neutral or with the clutch disengaged and with the steering wheel in place unless it's not safe to do so.

30.8 Repairs to a car may be carried out only in the paddock, pits and on the pre-grid.

30.9 Refueling is not permitted in the grid area or on pit lane.

30.10 The replenishment of any liquids is forbidden following the start of the race until after post-race scrutineering. All orifices for oil filling must be designed in such a way that the scrutineers can seal them.

30.11 Except as specifically authorized by these Sporting Regulations, only the driver may work on a stopped car unless it is in the paddock, the assigned pit location or on the pre-grid.

30.12 During the periods commencing five minutes prior to and ending five minutes after every practice and qualifying session and the periods between the commencement of the formation lap which immediately precedes each race and the time when the last car enters the parc fermé, no one is allowed on the track, the pit entry or the pit exit with the exception of:

a. Marshals or other authorized personnel in the execution of their duty.
b. Drivers when driving or on foot, having first received permission to do so from a marshal.
c. Team personnel when either pushing a car or clearing equipment from the pre-grid after all cars able to do so have left the pre-grid on the formation lap.
d. Team personnel when assisting marshals to remove a car from the grid after the start of the race.
e. Team personnel working on a car on the grid during a race suspension in accordance with Article 39.5.

30.13 During a race, the engine may only be started with the onboard starter except:

a. On the pre-grid
b. In the team's designated pit box or the team's designated paddock area
c. With the direction of the Race Director.

30.14 Drivers taking part in practice sessions and the races must always wear the clothesand helmet specified in these Sporting Regulations (See Appendix 1). It is prohibited to attach any type of camera or video recording device to the exterior or interior of the driver's helmet.

30.15 If a driver has serious mechanical difficulties during a session, he must leave the track as soon as it is safe to do so. Any vehicle that has stopped on-track during a session and required the assistance of emergency vehicles or staff, may be denied permission to re-enter the track by the Race Director.

30.16 The use of dry or wet weather tires is the choice of the Competitor. However, if circumstances warrant, the Race Director may mandate that all cars start a session on wet-weather tires.

30.17 The car's rear lights must be illuminated at all times whenever they are running on wet-weather tires or when instructed by the Race Director. It shall be at the discretion of the Race Director to decide if a driver should be stopped because his rear light is not working. Should a car be stopped in this way it may re-join when the fault has been remedied.

30.18 Drivers are required to report to the track medical center after an on-track incident involving contact (for example: car-to-car, car-to-wall, etc). This may be done by either the track safety team or a designated car provided by PMH. Drivers who fail to appear or teams who fail to present their drivers will be subject to penalty. After evaluation, medical personnel will advise if the participant is fit to return to competition or needs further evaluation.

30.19 Cars involved in such incidents may be parked at a centralized location during a session; however, Championship officials will ensure that all cars and drivers have returned to the paddock before leaving race control.

30.20 Failure to comply with the general safety requirements of these Sporting Regulations may result in the disqualification of the car and driver concerned from the Event.

30.21 The use of any; narcotic, performance-enhancement drugs, and/or recreational drugs, as defined by federal, and/or state law, by any participant, or official, is expressly prohibited, even if prescribed by a licensed physician.

30.22 Consumption of alcoholic beverages shall not commence until all official functions of the Championship Event have been completed for the day, including all post-session technical inspections.

30.23 SCCA Pro Racing or PMH reserves the right, at any time, to require any participant to successfully complete, at participant's expense, such tests as may be designated by SCCA Pro Racing or PMH, including, but not limited to, breath, blood, or urine. Refusal to submit to, and/or failure by participant of such testing shall result in penalties and/or failure by participant of such testing shall result in penalties and/or disqualification from the Event.

31. PRACTICE AND QUALIFYING SESSIONS

31.1 Except where these Sporting Regulations require otherwise, pit lane and track discipline and safety measures will be the same for all practice and qualifying sessions as for the race.

31.2 During all practice and qualifying sessions there will be a green and a red light or flag at the end of the pit lane. Cars may only leave the pit lane when the green light is visible. Additionally, a flashing blue light will be shown in the pit exit to warn drivers leaving the pit lane if cars are approaching on the track. If lights are unavailable, like colored flags may be displayed which shall have the same meaning as the lights.

31.3 The interval between the second or only free practice session and the qualifying session, in addition to the interval between the qualifying session and the first race, may not be less than two hours and 30 minutes unless specified by SCCA Pro Racing or PMH. The interval between races may generally be no less than two hours and 30 minutes unless specified by SCCA Pro Racing or PMH.

31.4 In the event of a driving infringement during any practice or qualifying session the Stewards may delete a driver's lap time(s), drop the driver such number of grid positions as they consider appropriate, or require the driver to start the following race from the pit lane. Unless it is completely clear that a driver committed a driving infringement any such incident will normally be investigated after the relevant session. Where appropriate, regard will also be given to the provisions of Article 17.1

31.5 Any driver taking part in any practice or qualifying session who, in the opinion of the Stewards, stops unnecessarily on the circuit or unnecessarily impedes another driver shall be subject to the penalties referred to in Article 31.4.

31.6 Should it become necessary to stop any practice or qualifying session because the circuit is blocked by an accident or because weather or other conditions make it dangerous to continue, the Clerk of the Course will order red flags to be shown at all marshal posts. When the red flag is displayed, all cars shall immediately reduce speed and proceed slowly (and without overtaking) back to the pit lane, and all cars abandoned on the track will be removed to a safe place. At the end of each practice or qualifying session no driver may cross the Line more than once.

31.7 The Clerk of the Course may interrupt practice, qualifying and race sessions as often and for as long as he thinks necessary to clear the track or to allow the recovery of a car. All Events are "time certain" and extension of sessions due to interruption is not likely. Sessions can be shortened, abandoned, or extended at the absolute discretion of the Race Director and the Stewards. Such decisions may not be protested.

32. PRACTICE SESSIONS

32.1 At least one free practice session of at least 20 minutes and of no more than 45 minutes duration will be scheduled on the first day of the Event.

If the procedure set out in Article 33.2 below is used, free practice sessions may also be split using the same principles.

33. QUALIFYING SESSIONS

33.1 At least one qualifying session of at least 20 minutes and of no more than 30 minutes duration will be scheduled on the first or second day of the Event.

33.2 If the number of cars entered for an Event exceeds the number of cars which are permitted to take part in practice (according to the requirements of the circuit license), the cars may be split into two groups. The method used to split the groups will be determined by the Race Director.

33.3 No driver may start a race without either taking part in at least one Championship session during the weekend or approval by the Race Director.

33.4 Qualifying grids will be based on the fastest lap of the driver in either practice session. Should both practice sessions be cancelled for any reason, the qualifying grid will be based on FR Championship driver points. If two or more drivers have the same number of points, their grid order will be determined in accordance with the provisions of Article 7.2. In the event that both practice sessions are cancelled at the first Event of the Championship season, the qualifying grid will be drawn up at the discretion of the Race Director. Cars not in position by the 1-minute announcement must start the session from the back of the pre-grid.

34. THE GRID

34.1 At the end of qualifying the fastest time achieved by each driver will be officially published.

34.2 At Events with three races, the grid for the first race will be drawn up in the order of the fastest qualifying time achieved by each driver in the qualifying practice session. The grid for the second race will be drawn up in the order of the fastest race time achieved by each driver in the first race. The grid for the third race will be drawn up in the order of the fastest race time achieved by each driver in the second race.

At Events with two races, the grid for the first race will be drawn up in the order of the fastest qualifying time achieved by each driver in the qualifying practice session and the grid for the second race will be drawn up in the order of the fastest race time achieved by each driver in the first race.

Should two or more drivers have identical times, priority will be given to the one who set it first.

Should the qualifying session be cancelled for any reason, the grid for the first race will be drawn up based on the grid for such cancelled qualifying session. If the first or second race is cancelled for any reason, the grid for the following race will be drawn up based on the grid for such cancelled race session.

34.3 Grids will generally be published at least one hour before the start of the relevant formation lap. Any driver who is unable to start for any reason whatsoever must inform the Stewards at the earliest opportunity and in any case, no later than 45 minutes before the start of the formation lap.

If one or more cars are withdrawn, the starting grid will be closed up accordingly and the final starting grid confirmed thirty minutes before the start of the formation lap.

Cars not in position on the pre-grid at the 5-minute announcement will take their start from pit lane after the field has passed pit out. Their grid slots will remain open.

34.4 The highest qualified car/driver combination will start the race from the pole position on the grid. Pole position will always be on the side homologated by the FIA as listed in the track license or as outlined in the Event Supplemental Regulations.

If the qualifying sessions were split in accordance with Article 33.2, the fastest driver overall will start from pole position on the grid and the fastest driver from the other group will start from second place on the grid. The remaining cars will be arranged on the grid in rows corresponding to their group and behind the fastest driver from each of their groups.

If one of the two groups has fewer qualified drivers than the other or following a decision of the Stewards, the gaps on the grid will be closed up accordingly.

Any driver(s) who cannot start the race because their qualifying position places them outside the maximum number of cars permitted by the circuit license, will only be allowed to start the race if any driver who qualified higher than him is unable to start and withdraws at least 45 minutes before the start of the formation lap.

34.5 Any driver whose best qualifying lap exceeds 110% of the pole position time will not be allowed to take part in the race. Under exceptional circumstances the Race Director may permit the car to start the race.

Any driver accepted in this manner will be placed at the back of the starting grid after any other penalties have been applied.

Should there be more than one driver accepted in this manner they will be arranged on the grid in the order in which they were classified in free practice.

34.6 A hardship lap may be granted by the Race Director. If granted, the distance on the circuit shall be from pit out to pit in only – the vehicle shall not cross the start/finish line or start finish timing loop on the course. Only previously used dry weather tires will be used.

34.7 The grid will be in a staggered 1 x 1 formation generally separated by 24 feet or as specified in the Event Supplemental Regulations.

35. MEETINGS

35.1 A meeting chaired by the Race Director will take place on the first (1st) day of practice at a location to be advised, all drivers entered for the Event and their Competitors must be present. All meetings and autograph sessions listed on the Event schedule are mandatory unless otherwise indicated. Drivers and Competitors missing mandatory meetings may result in a $250 fine and/or additional penalties.

36. STARTING PROCEDURE

36.1 Unless otherwise directed by the Race Director, all cars will assemble in grid order prior to the start of the race on the pre-grid. Pre-grid will close five minutes prior to the start of the formation lap(s) unless the official schedule indicates otherwise. At the completion of the preceding session and at the direction of the grid marshals, all cars will be released on their formation lap(s). All cars must remain in grid order during the formation lap(s).

The Race Director has the discretion to declare two formation laps. Competitors will be given as much advance notice, via the official communication channels, as is reasonably possible under the circumstances.

In certain circumstances, such as large fields, short track lengths and/or changing track conditions, the Race Director may specify two formation laps after the field has left pre-grid, but before the green flag is displayed to start the race. The official race clock will start when the first car crosses the Line after the first formation lap.

36.2 During the formation lap(s) practice starts are forbidden and the formation must be kept as tight as possible.

36.3 If a driver does not leave the pre-grid in the assigned position, this driver must enter the pit lane and start from the designated area at pit out.

Overtaking during the formation lap(s) is only permitted if a car is delayed and cars behind cannot avoid passing it without unduly delaying the remainder of the field.

If a driver falls out of position during the formation lap, this driver must enter the pit lane and start from the designated area at pit out.

A penalty under Article 15.3 (b) will be imposed on any driver who fails to enter the pit lane after one of the above infractions.

36.4 At the completion of the formation lap(s) all cars will assemble on the starting grid in their designated spaces. It is the driver's responsibility to know which side of the grid he will start from. It is the team's responsibility to guide their driver into the start box. No part of the car can be over the start box line.

The starting light sequence will consist of five red lights. As soon as all cars are properly assembled on the grid the green lights will illuminate to signal that the grid is full, then the red start light sequence will begin. The five second light will appear followed by the four, three, two and one second lights. At any time after the one second light illuminates, the race will start by extinguishing all red lights. When the red lights are extinguished, the race time clock shall start and run continuously until the expiration of the race time, unless otherwise directed by the Race Director. On an aborted start the race clock will start when the abort lights that signify a rolling start come on and continue to run until race time expires.

36.5 Any driver in need of assistance once the red-light sequence has started, must raise his arm. If able, the starting light sequence will stop, and the abort lights will flash indicating an aborted start. Green lights will indicate a rolling start and the beginning of a pace lap, When the remainder of the cars able to do so have left the grid, marshals will be instructed to move the car into the pit lane. Any driver being pushed from the grid may not attempt to start the car and must follow the instructions of the marshals and officials.

Once in the pit lane, the team may then attempt to rectify the problem and, if successful, the car may then start from the end of the pit lane. Should there be more than one car involved their starting order will be determined by the order in which they reached the end of the pit lane.

36.6 The remaining cars able to continue will commence a pace lap, under yellow flag conditions, led by the safety car. All cars will remain in grid order and form up for a side-by-side formation rolling start.

36.7 False Start infractions will be penalized per Article 15.1.(c) and 15.3 (a), (b), (c), and (d).

36.8 A False Start occurs when a driver:

a. Is in the wrong position for the start (as described above) or reverses on grid
b. Moves forward from the prescribed position before the start signal is given
c. Is moving when the start signal is given during a standing start and gains an advantage
d. Accelerates early or unevenly during a rolling start or fails to maintain the prescribed formation order.

36.9 The Official Starter shall always be a Judge of Fact under these Sporting Regulations of starts and re-starts but may be overruled by the Stewards. Stewards may use any video or electronic means to assist in any false start penalties. A breach of the provisions of the Sporting Regulations may result in the disqualification of the car and driver concerned from the Event.

36.10 Unless specifically authorized by the Race Director, during the start of a race the pit wall must be kept free of all persons except for officials emergency services personnel, and flag or pit marshals.

36.11 All cars starting from the pit lane may join the race once the whole field has passed the end of the pit lane for the first time after the start.

37. THE RACES

37.1 During a race, drivers leaving the pit lane may only do so when the light or flag at the end of the pit lane is green and on their own responsibility. A marshal with a blue flag and/or a flashing blue light, will also warn the driver if cars are approaching on the track.

37.2 There will be two or three races of no more than 35 minutes duration at each Event. The race duration will be specified in the Event schedule or Supplemental Regulations of each Event. Race time begins at Race Start as defined in Articles 36.4 and 38.14 and ends as defined by Article 41.1.

38. SAFETY CAR

38.1 The safety car will be driven by a SCCA Pro Racing approved driver and will carry an approved observer capable of recognizing all the competing cars who is in permanent radio contact with Race Control.

38.2 Prior to the start of the formation lap the safety car will take up position at the front of the pre-grid and remain there until the five-minute signal is given. When instructed to do so by Race Control it will move onto the circuit and lead all cars for the formation lap.

38.3 The safety car may be brought into operation to neutralize a race upon the order of the Clerk of the Course.

It will be used only if competitors or officials are in immediate physical danger, but the circumstances are not such as to necessitate suspending the race.

38.4 When the order is given to deploy the safety car the message “SAFETY CAR DEPLOYED” will, where possible, be displayed on the timing monitors and all marshals’ posts will display waved yellow flags (double yellow flags preceding any incidents and single yellow flags otherwise) and “SC” boards for the duration of the intervention.

38.5 The safety car will join the track with its lights illuminated and pick up the race leader or as directed by the Clerk of the Course.

38.6 All competing cars must reduce speed and form up in line behind the safety car approximately three car lengths apart.

38.7 With the exception of the cases listed under a) to h) below, no driver may overtake another car on the track, including the safety car, until he passes the Line for the first time when the safety car is returning to the pits. However, if the safety car is still deployed at the beginning of the last lap, or is deployed during the last lap, Article 38.14 will apply.

The exceptions are:

a. If a driver is signaled to do so from the safety car.
b. Under Articles 38.12 or 38.15 below.
c. When entering the pits, a driver may pass another car remaining on the track, including the safety car, after he has reached the first safety car line.
d. When leaving the pits, a driver may overtake, or be overtaken by, another car on the track before he reaches the second safety car line.
e. When the safety car is returning to the pits it may be overtaken by cars on the track once it has reached the first safety car line.
f. While in pit lane, a driver may overtake another car only after the car being overtaken has moved from the fast lane to the transition lane or his pit box. Also, a car in the fast lane can continue past a car leaving its pit box or traversing through the transition lane as long as he does not effect the ability of said car to move into the fast lane. Other than these two circumstances, there is no passing allowed in the pit lane. Passing is also prohibited in pit entry and pit exit.
g. Any car stopping in its designated pit box while the safety car is using the pit lane (see Article 38.10) may be overtaken.
h. If any car slows with an obvious problem.

38.8 If a car spins or goes off during a safety car deployment and can continue racing, that driver must move to the rear of the field before the restart.

38.9 When ordered to do so by the Clerk of the Course the observer in the car will signal to any cars between it and the race leader that they should pass. These cars will continue at reduced speed and without overtaking until they reach the line of cars behind the safety car.

38.10 The safety car shall be used at least until the leader is behind it and all remaining cars are lined up behind him.

Once behind the safety car, the race leader must keep within ten car lengths of it (except under Article 38.12 below).

38.11 Under certain circumstances the Clerk of the Course may ask the safety car to use the pit lane. In these cases, and provided its lights remain illuminated, all cars must follow it into the pit lane without overtaking. Any car entering the pit lane under these circumstances may stop at its designated pit area. Upon rejoining the field, the car must move to the rear of the line. Cars in pit boxes at the beginning of pit lane will be given preference over those at the end.

38.12 When the Clerk of the Course decides it is safe to call in the safety car the message “SAFETY CAR IN THIS LAP” will, where possible, be displayed on the timing monitors and the car’s lights will be extinguished. This will be the signal to the teams and drivers that it will be entering the pit lane at the end of that lap.

Once the lights on the safety car are extinguished, it may accelerate away from the leader. At this point the leader may not fall below “lights on safety car speed” and once the safety car has distanced itself from the field, the leader may accelerate, while keeping a safe distance away from the safety car, as long as the safety car is not passed before the first safety car line.

In order to avoid the likelihood of accidents before the safety car returns to the pits, from the point at which the lights on the car are turned out drivers must proceed at a pace which involves no erratic acceleration, braking, weaving or tire warming nor any other maneuver which is likely to endanger other drivers or impede the restart.

As the safety car is approaching the pit entry the yellow flags & SC boards will be withdrawn and, other than on the last lap of the race, replaced by waved green flags and/or green lights at the Line. These will be displayed until the last car crosses the Line. For each event the Race Director will indicate where the restart passing zone starts after a green flag.

38.13 Each lap completed while the safety car is deployed will be counted as a race lap.

38.14 Under certain circumstances the race may be started behind the safety car or resumed in accordance with Article 40.5 (a). In either case, at the three-minute signal (or as directed by the Championship) its lights will be illuminated, this being the signal to the drivers that the race will be started (or resumed) behind the safety car.

The safety car will leave the grid and all drivers must follow in grid order, approximately three car lengths apart, and must respect the pit lane speed limit until they pass the second safety car line. During a race start there will be no formation lap and the race will start when the starter waves the green flag and/or the green lights are illuminated.

Overtaking is only permitted if:

a) A car is delayed when leaving the grid and cars behind cannot avoid passing it without unduly delaying the remainder of the field, or
b) There is more than one car starting from the pit lane and one of them is unduly delayed, or
c) A car falls out of position on track.

Any driver delayed in these ways, must enter the pit lane and may only join the race once the whole field has passed the end of the pit lane.

39. SUSPENDING A RACE OR QUALIFYING SESSION

39.1 If competitors or officials are placed in immediate physical danger by cars running on the track, and the Clerk of the Course deems circumstances are such that the track cannot be negotiated safely, even behind the safety car, the race or qualifying session will be suspended.

39.2 Should it become necessary to suspend the race or qualifying session, the Clerk of the Course will order red flags to be shown at all marshal posts. All cars will then proceed to pit lane, at reduced speed and without overtaking, and directed to stop in the pit fast lane by the pit marshals.

39.3 If the race is suspended during a safety car intervention, and the safety car is directed into the pit lane, cars should stop in a line behind the safety car in the fast lane of the pits.

39.4 Any cars unable to return to the pit lane as a result of the track being blocked will be brought back when the track is cleared and will be arranged in the order they occupied before the race was suspended.

In all cases the re-start order will be taken at the last completely scored lap.

The safety car will then be driven to the front of the pit lane.

39.5 While the race or qualifying session is suspended:

a. Neither the session nor the timekeeping system will stop; however, where the Event timetable can accommodate it, the length of the session suspension will be added to the maximum time for the session in question.
b. Driver comforts can be accommodated.
c. Only three team members per car will be permitted in the pit lane.
d. Cars may not be worked on beyond those actions explicitly stated by Race Control.
e. Jump batteries can only be connected after a restart warning and must be disconnected before the final warning for cars to be released.

39.6 If required, cars will re-grid as instructed by the Race Director. At all times drivers must follow the direction of the marshals.

40. RESUMING A RACE

40.1 The delay will be kept as short as possible and as soon as a resumption time is known teams will be informed via the timing monitors where possible, or on the dedicated radio channel.

40.2 Signals will be shown, if time allows, at three minutes and one minute (or as directed by the Championship) before the resumption.

40.3 Cars will be gridded for the re-start according to their position on the last fully-scored lap.

40.4 When the one-minute signal is shown, engines should be started and all team personnel must leave the pit lane taking all equipment with them. If any driver needs assistance after the one-minute signal he must raise his arm and, when the remainder of the cars able to do so have left the pit lane, marshals will be instructed to push the car out of the fast lane of the pits and into the closest pit box available.

40.5 The race will be resumed behind the safety car. The safety car will enter the pits after one lap unless:

a. The race is being resumed in wet conditions and the Race Director deems more than one lap necessary, in which case see Article 38.15.
b. All cars are not yet in a line behind the safety car.
c. Team personnel are still clearing the pit lane.
d. A further incident occurs necessitating another intervention.

40.6 Overtaking behind the safety car is only permitted if:

a. A car is delayed when leaving the grid and cars behind cannot avoid passing it without unduly delaying the remainder of the field, or
b. There is more than one car starting from the pit lane and one of them is unduly delayed, or
c. A car falls out of position on track.

Any driver delayed, unable to resume in the starting order, or falls out of position must re-start the race at the end of the line.

40.7 Either of the penalties under Article 15.3 a) or b) will be imposed on any driver who, in the opinion of the Stewards, unnecessarily overtook another car during the lap.

During this lap Articles 38.12, 38.13, 38.14, and 38.15 will apply.

40.8 If the race cannot be resumed the results will be taken at the end of the last completely-scored lap before the lap during which the signal to suspend the race was given.

41. FINISH

41.1 The end of race signal, generally the checkered flag, will be given to the leader of the race at the finish line as close to the allotted time as possible in accordance with Article 5.4.

The Race Director has complete authority to call for the end of race signal at any point during a competition. This action is not protestable.

In the event that the leading car may cross the Line very close to the expiration of the allotted race time, the Race Director may declare the number of laps remaining before the display of the end-of-race signal. This action is not protestable.

41.2 Should for any reason the end-of-race signal be given before the leading car completes the scheduled race time, the race will be deemed to have finished when the leading car last crossed the Line before the signal was given. Should the end-of-race signal be delayed for any reason other than 41.1, the race will be deemed to have finished when it should have finished.

41.3 After receiving the end-of-race signal, all cars must proceed on the circuit directly to the parc fermé without any unnecessary delay, without overtaking (unless clearly necessary), without receiving any object whatsoever and without any assistance (except that of the marshals, if necessary).

Any classified car which cannot reach the parc fermé under its own power will be placed under the exclusive control of the marshals who will take the car to the parc fermé.

42. PARC FERME

42.1 Only those officials charged with supervision may enter the parc fermé. No intervention ofany kind is allowed there unless authorized by such officials.

42.2 Parc fermé conditions exist for all cars when the checkered flag is displayed for qualifying and races. Top 3 cars are to report directly to series tech area. Others required to report to tech area will be informed by the Race Director or Clerk of the Course during or within five minutes after the session. All other cars may be directed to a designated parc fermé area or, if directed to via official channels, return to their paddock area but must not enter their canopy. During parc fermé, no one may touch cars for any reason. If cars are at their paddock area, one crew member may remove the video card from the car. Teams may request permission from the Technical Delegate to commence repairs during parc fermé. Underneath the tech awning and any area designated by the Championship is considered part of parc fermé.

43. CLASSIFICATION

43.1 The car placed first will be the one having passed the Line in the lead at the end of the allotted race time (or more if the race is suspended, see Article 39.5). All cars will be classified taking into account the number of complete laps they have covered, and for those which have completed the same number of laps, the order in which they crossed the Line.

43.2 Cars having covered less than 75% of the number of laps covered by the winner (rounded down to the nearest whole number of laps), will not be classified.

43.3 The official classification will be published after the race. It will be the only valid result subject to any amendments which may be made under these Sporting Regulations.

44. PODIUM CEREMONY

44.1 The drivers finishing the races in first, second and third positions and a representative of the winning team must attend the prize-giving ceremony on the podium and immediately thereafter make themselves available for the purpose of television interviews and a press conference in the media center. All drivers must attend the last race ceremonies for each Event unless specifically permitted by the Championship. Weekend driver awards will be awarded at that time.

44.2 No prize money or contingencies will be paid out until all event fees and fines have been collected by PMH.

45. PRESS CONFERENCE AND PROMOTION

45.1 Upon request, all registered drivers are obliged to attend, without compensation, all press conferences organized by the Championship. The following obligations must in addition berespected:

Immediately after qualification and/or prize giving the first three classified drivers of the race will be required to make themselves available for a press conference (at a location specified in the Supplemental Regulations). All of these three drivers are obliged to attend this press conference.

The drivers must wear their closed overalls and designated caps during the press conferences.

45.2 Drivers must take part in any promotional activity requested by the Championship such as autograph sessions, prize giving, press conferences, pit road walkabouts and pre-race parades.

The drivers, Competitors and manufacturers give the right to SCCA Pro Racing and PMH to use their name for any promotional, advertising, publicity and public relations purpose, for the promotion of the Championship.

Use of the Championship logo by the Competitors, manufacturers and drivers or their agents or representatives is prohibited other than by prior permission in writing from SCCA Pro Racing.

45.3 Any, and all, on-board footage shot at any FR Americas Championship Event belongs exclusively to the Championship.

a. No live on-board video transmission of any kind is allowed unless requested by the Championship.
b. Teams and drivers wishing to share their footage on social media and their website must wait at least 12 hours after an official session before posting footage.
c. Said footage is limited to short clips that do not exceed 2 minutes in length.
d. One complete lap may be shown, even if this exceeds 2 minutes, but not more than one complete lap.
e. Any footage containing anything out of the ordinary, negative toward another competitor or the Championship, or accidents may not be posted without first receiving permission from the Championship.

45.4 Outside media personnel are required to apply for credentials and follow all media guidelines set forth by the Championship or the facility.

45.5 Any outside media personnel must remain fully aware of any Championship authorized crew, who have priority at all times, including, but not limited to, standing starts, finishes, podium ceremonies, and post-race interviews.

45.6 Requests for any footage from a Championship Event to be used for broadcast, promotions, or other distribution in any way, must be made in writing to Scott Goodyear (scott@parellamotorsports.com).

45.7 A positive image of SCCA Pro Racing, PMH. the FR Americas Championship and its Competitors, sponsors, and officials must be portrayed at all times, including as it pertains to promotions.

45.8 Any promotional material (photo, video, etc) obtained that goes outside the above guidelines will result in the immediate withdrawal of media access for the offender.

46. VIDEO PROCEDURE

46.1 Video files must have correct date and time stamp.

46.2 Video cards must be empty at beginning of each official on track session.

46.3 Video cards of all impounded cars must be removed by one team member, the video content may be copied to a laptop while in the impound area, and the card must be turned in to the Drop Off box immediately after. Competitors are required to submit video cards to the Stewards of the meet within 15 minutes of the end of each session. If there is an issue with the video content, the team member must notify a Championship tech official or steward immediately. Teams are not allowed to edit, manipulate, or delete any video content prior to submitting their card until Parc Fermé has been lifted.

46.4 For cars not in impound, one team member must remove video card from camera while in Parc Fermé, the video content may be copied to a laptop while in the Parc Fermé area, and immediately turn the video card into the Drop Off box. Competitors are required to submit video cards to the Stewards of the meet within 15 minutes of the end of each session. If there is an issue with the video content, the team member must notify an SCCA tech official or steward immediately. Teams are not allowed to edit, manipulate, or delete any video content prior to submitting their card until Parc Fermé has been lifted.

46.5 Teams must provide a minimum of three 16 GB video cards per car.

46.6 Video cards must be SD-sized or in an SD-sized adapter and labeled with car number as shown. Stickers are available at the Championship trailer.

46.7 SD Card must be named with Championship and car number.

46.8 Turn In & Pick Up

Drop Off box for video cards will be at the Championship trailer. Cards must be placed in slot corresponding to car number within 15 minutes after each official session.	Announcements will be made via official channels when cards are available for pick up after testing, practice, and qualifying sessions. Pick Up boxes will be available at the Championship trailer. Teams can expect to pick up cards for race sessions at the next event.

Failure to comply may result in a penalty.

47. APPENDIX 1 – DRIVERS SAFETY KIT

Equipment	**FIA Standard**	**FIA Regulations**
Safety Belts w/ appropriate expiration dates	FIA Standard 8853-2016	Article 4 "Safety Belts" Chapter III "Drivers' Equipment Appendix L – ISC & Art. 14.4 of Technical Regs
Helmets	FIA Standard 8860-2018 ABP	Article 1 "Helmets" Chapter III "Drivers' Equipment" Appendix L – ISC
Drivers Clothing	FIA Standard 8856-2000 FIA Standard 8856-2018 – required beginning 01/01/24	Article 2 "Flame-resistant clothing" Chapter III "Drivers' Equipment" Appendix L - ISC
Frontal Head Restraint	FIA Standard 8858-2002 FIA Standard 8858-2010	Article 3 "Frontal Head Restraint (FHR)" Chapter III "Drivers' Equipment" Appendix L – ISC
Extinguisher	FIA Standard for Plumbed-in Fire Extinguisher Systems in Competition Cars	
Fuel Tank	FT5/1999	

48. APPENDIX 2 – CHAMPIONSHIP SERIES FEES

Description	*Fee*	*Early Bird Discount**	*Late Fee***
Event Entry	$3,300	$3,050	
Vehicle Registration	$1,000		
FRAC Driver License^	$500		$150
FIA Grade C License	$500		$150
Crew Credential^	$225		$150

*Early Bird Discounts expire at the close of business on the day two (2) weeks prior to the first official session.
**To be eligible to participate in the Event, Championship drivers must submit an application with all required documents (including medical materials) by close of business on the Monday two (2) weeks prior to the Event week. After this deadline and until close of business on the Friday of the week prior to the Event, a fee, outlined above, must be paid to expedite the credentialing process. Applications (or related documents) may not be processed for the Event after close of business on the Friday of the week prior to Event. In some instances, deadlines may be adapted in consideration of holidays and consecutive Events.
~PMH reserves the right to adjust the entry fee
^Vehicle registration includes rental fee of ADR, CYL, and one set of required sponsor decals
^^FR Americas Championship Driver License and Crew Credential require an SCCA Membership at an additional cost

49. APPENDIX 3 – CHAMPIONSHIP EVENT PAYOUT

Finished Position	*Amount**
First	$750
Second	$300
Third	$150

*Please note that this is subject to change.

50. APPENDIX 4 – LIVERY

Car Side View Example & Location Descriptions

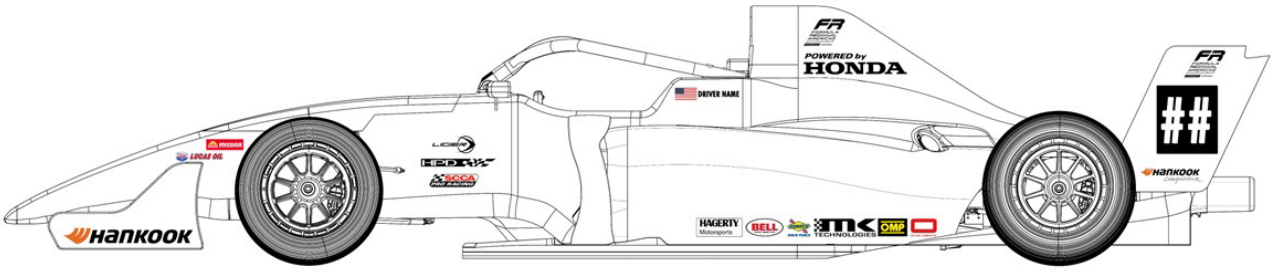

Front Wing	Front Chassis	Intake Cover		Engine Cover	Sidepod Ribbon	Rear Wing	
Long Hankook decal should be centered.	Top of decal sheet should be 7" down from the top of the chassis, centered on the halo.	Small FR logo should be 1" down from the top (profile, not curved over).	Powered by Honda should be 6.5" down from top (profile, not curved over). Leave a minimum isolation space of 2.5" from the base of the HONDA.	Leave 3" by 12" space for title sponsor.	All decals will be 2" tall. Bottom of decal should be 2" above the undertray. Group decals together in an organized fashion.	Large FR logo should be in alignment with the wing plane, positioned 1" below the top. Short Hankook logo should be positioned 1" above the bottom of the wing.	Optional number plate should be in contrast with the wing color, positioned 8" down from the top of the wing. Numbers must be bold in font and in a high-contrast color, centered on the plate or in the middle.
Side Nose				**Cockpit Side**			
Logos should not be blocked by wheel or wing.				Home country flag to the left of name. Single color font without outline or shadow.			

Car Nose View Example & Location Descriptions

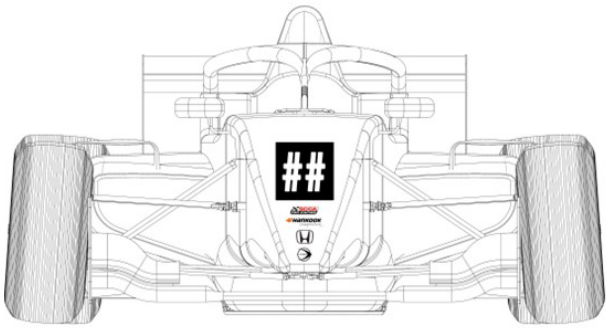

Number & Number Plate
White or black number plate should be in contrast with the chassis color, positioned 3" down from the nose cone connection point. Numbers will be in opposite color, centered on the plate in a large visible font.
Sponsor Column
Top of decal sheet should be 10" down from the nose cone connection point.

Images from the 2023 Style Guide V1. For most up to date information, visit the Style Guide webpage.

51. APPENDIX 5 – DRIVER UNIFORMS

Driver Suit

*Drawing is not to scale

Upper Left Chest	Upper Right Chest
Championship Logo: 3" tall; width proportionate to the logo design	Future Title Sponsor: Leave 2"x4.5" space blank SCCA Pro Logo: 2"x4.5" Honda H Logo: 2.5" tall; there needs to be at least half the height of the logo surrounding the combined H logo Lucas Oil Logo: 2.5" tall

Upper Left Arm

All logos are 2" tall, width proportionate to the logo design; order top to bottom to be reflected as example to the right.

For dark suits, please use white logos in lieu of black logos featured here. All drivers will receive one (1) suit kit with their driver registration. This suit kit includes all required Championship and partner/sponsor logo patches. Drivers are free to have their suits embroidered in lieu of these patches, but layouts require approval. All drivers are required to wear a suit meeting proper branding standards when on the podium. Additional details are outlined in the Sporting Regulations.

Driver Shirt

*Drawing is not to scale

Upper Left Chest	Upper Right Chest
Championship Logo: 2.5" tall; width proportionate to the logo design	Future Title Sponsor: Leave 1.5"x3" space blank SCCA Pro Logo: 1.5"x3" Honda H Logo: 2.5" tall; there needs to be at least half the height of the logo surrounding the combined H logo

Upper Left Arm

All logos are 1.5" tall, width proportionate to the logo design; order top to bottom to be reflected as example to the right.

For dark shirts, please use white logos in lieu of black logos featured here. All drivers are required to wear a driver shirt during official sessions (practice, qualifying, and races). This shirt can be worn in lieu of a suit at promotional events with the permission of Championship officials. Additional details are outlined in the Sporting Regulations.

Images from the 2023 Style Guide V1. For most up to date information, [visit the Style Guide webpage](#).

52. APPENDIX 6 – CREW UNIFORMS

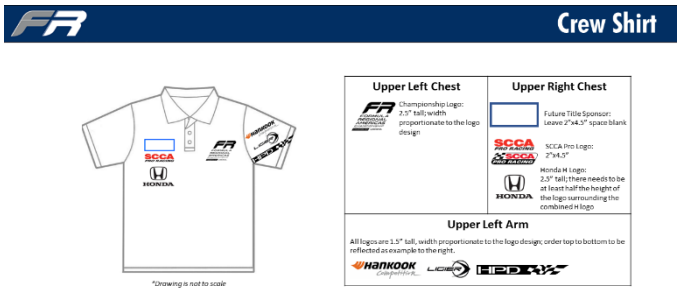

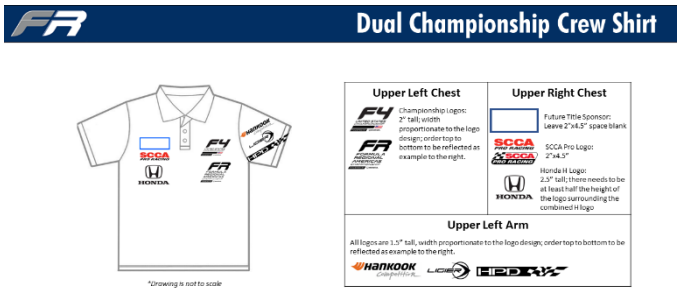

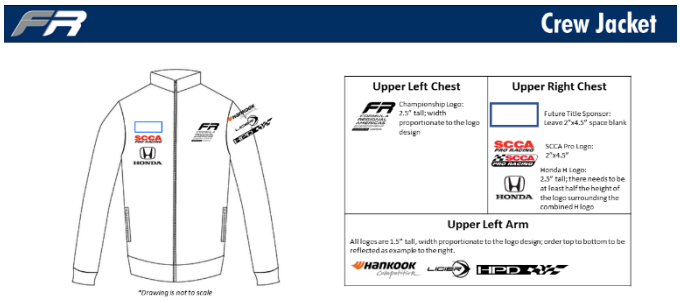

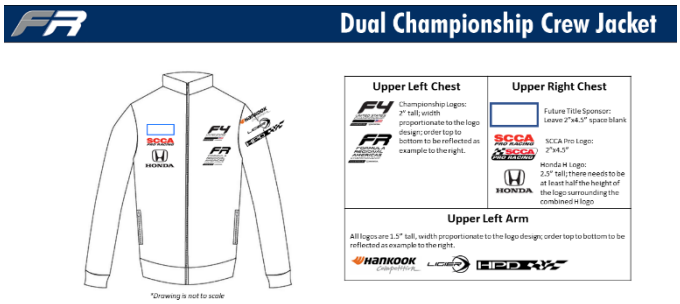

Images from the 2023 Style Guide V1. For most up to date information, [visit the Style Guide webpage](#).

53. APPENDIX 7 – TRAILER LIVERY

Dual Team Transporter

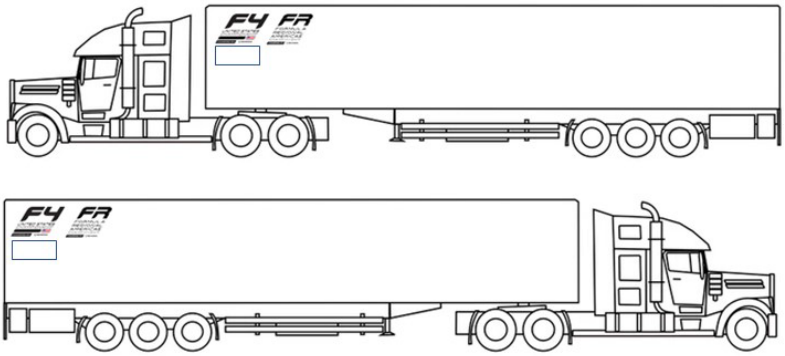

*Drawing is not to scale

Driver's Side	Passenger's Side
Championship Logos: 9' tall; width proportionate to the logo design Future Title Sponsor: Leave 2'x4' space blank Location of logos should be at the front of the trailer.	Championship Logos: 9' tall; width proportionate to the logo design Future Title Sponsor: Leave 2'x4' space blank Location of logos should be at the rear of the trailer.

These decals are not part of the decal kit provided with vehicle registration. Teams should make every effort possible to not feature conflicting logos with our primary sponsors/partners: Hankook, Honda/HPD, and Liger.

Team Transporter

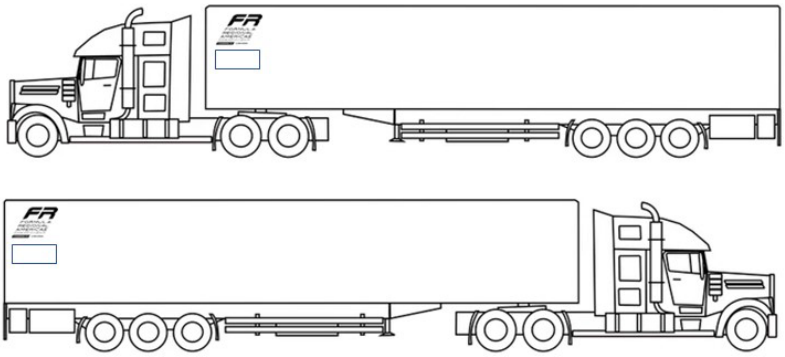

*Drawing is not to scale

Driver's Side	Passenger's Side
Championship Logo: 9' tall; width proportionate to the logo design Future Title Sponsor: Leave 2'x4' space blank Location of logos should be at the front of the trailer.	Championship Logo: 9' tall; width proportionate to the logo design Future Title Sponsor: Leave 2'x4' space blank Location of logos should be at the rear of the trailer.

These decals are not part of the decal kit provided with vehicle registration. Teams should make every effort possible to not feature conflicting logos with our primary sponsors/partners: Hankook, Honda/HPD, and Liger.

Images from the 2023 Style Guide V1. For most up to date information, [visit the Style Guide webpage](#).

54. APPENDIX 8 – COMMUNICATION FLAGS

Flags are an official method for communicating with competitors. Flags may be replaced or supplemented by lights and/or reflective panels, which shall have the same meaning as the flags. As we are an FIA Certified series, we use FIA flagging rules.

FLAG	COMMUNICATION
	GREEN: When displayed by the starter, signals the beginning or resumption of a session. Also shown following a yellow caution area to indicate passing may resume when beyond the green flag.
	BLACK/WHITE DIAGONAL: Competitor warning displayed with number board. Flag is shown at Start/Finish area and is used as a warning for unsportsmanlike behavior.
	BLACK: Summons competitor to pit lane for consultation and/or penalty. Shown with number board from start/finish and designated station(s) on the circuit. The summoned driver may cross the S/F line no more than twice before entering pit lane. Once on pit lane, driver must report to his pit box.
	BLACK/ORANGE CIRCLE: Informs competitor of a mechanical problem that may endanger the driver or other competitors. Shown with number board. Competitors must stop at their pit on the next approach to pit entry. Once on pit lane, driver must report to his pit box.
	SINGLE WAVED YELLOW: Reduce your speed, do not overtake, and be prepared to change direction. There is a hazard beside or partly on the track. It must be evident that a driver has reduced speed; this means a driver is expected to have braked earlier and/or noticeably reduced speed in that sector. No passing from the station displaying yellow until after you have reached the station displaying a green flag.
	DOUBLE WAVED YELLOW: Reduce your speed significantly, do not overtake, and be prepared to change direction or stop. There is a hazard wholly or partly blocking the track and/or marshals working on or beside the track. During free practice and qualifying, it must be evident that a driver has not attempted to set a meaningful lap time; this means the driver should abandon the lap (this does not mean he has to pit as the track could well be clear the following lap). No passing from the station displaying yellow until after you have reached the station displaying a green flag.
	RED: The session has been stopped. Use caution, reduce speed, and proceed immediately to pit lane. Overtaking is not permitted. During a race, no work may be performed on vehicles unless authorized by the Race Director or Technical Delegate.
	SOLID BLUE OR BLUE/YELLOW DIAGONAL: Warns that faster cars are approaching or a following car may be in a competitor's blind spot. Use caution and sportsmanship – allow racing room.
	YELLOW/RED STRIPES: Caution – the racing surface may be affected by fluids or debris.
	STATIONARY WHITE AROUND CIRCUIT: Caution, slow moving vehicle ahead. **WAVED WHITE AT START/FINISH:** Indicates the last lap of a competition.
	WHITE/RED DIAGONAL AT START/FINISH: Emergency vehicles are on course.
	BLACK/WHITE CHECKERED: Shown at the completion of practice, qualifying, or race. All cars shall exit the course once they have received the checkered flag and passed start/finish.
FCY	**FCY BOARD:** Show at all marshal posts. The entire circuit is now under a speed limit of 40 mph/pit speed. Reduce your speed safely, do not overtake, and be prepared to change direction or stop in a corner or corners displaying double waiving yellow flags.
SC	**SC BOARD:** Shown at all marshals' posts to indicate the Safety Car is on the circuit.